Journal Pre-proofs

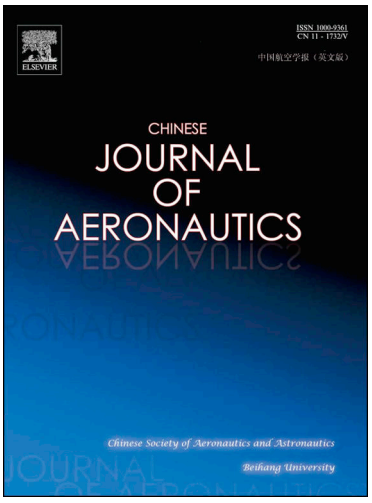

Review

Research status and prospect of avionics system technology for spacecraft

Chaoji CHEN, Yaobao YIN, Kewu HUANG, Xiongwen HE

PII: S1000-9361(25)00654-5
DOI: https://doi.org/10.1016/j.cja.2025.104048
Reference: CJA 104048

To appear in: *Chinese Journal of Aeronautics*

Received Date: 1 April 2025
Revised Date: 23 December 2025
Accepted Date: 23 December 2025

Please cite this article as: C. CHEN, Y. YIN, K. HUANG, X. HE, Research status and prospect of avionics system technology for spacecraft, *Chinese Journal of Aeronautics* (2025), doi: https://doi.org/10.1016/j.cja.2025.104048

This is a PDF of an article that has undergone enhancements after acceptance, such as the addition of a cover page and metadata, and formatting for readability. This version will undergo additional copyediting, typesetting and review before it is published in its final form. As such, this version is no longer the Accepted Manuscript, but it is not yet the definitive Version of Record; we are providing this early version to give early visibility of the article. Please note that Elsevier's sharing policy for the Published Journal Article applies to this version, see: https://www.elsevier.com/about/policies-and-standards/sharing#4-published-journal-article. Please also note that, during the production process, errors may be discovered which could affect the content, and all legal disclaimers that apply to the journal pertain.

© 2025 The Author(s). Published by Elsevier Ltd on behalf of Chinese Society of Aeronautics and Astronautics.

Final Accepted Version
Journal Pre-proofs

Contents lists available at ScienceDirect

Chinese Journal of Aeronautics

Journal homepage: www.elsevier.com/locate/cja

Research status and prospect of avionics system technology for spacecraft

Chaoji CHEN [a,b,*], Yaobao YIN[a], Kewu HUANG[b], Xiongwen HE[b]

[a]*School of Mechanical Engineering, Tongji University, Shanghai 201804, China*

[b]*Beijing Institute of Spacecraft System Engineering, Beijing, 100094, China*

Received 1 April 2025; revised 31 August 2025; accepted 17 October 2025

Abstract

The existing studies on spacecraft focus on improving the networked, intelligent, and autonomous level of avionics systems. This paper reviews the research status of spacecraft avionics system architecture and typical spacecraft avionics system, as well as the technical features and potential trends of key technologies, such as network interconnection, high-speed bus, onboard computing, autonomous operation, and software-defined technology. A development roadmap, a novel kind of intelligent system architecture and application scenarios of avionics systems are then proposed. To tackle the challenges faced in the development of spacecraft avionics systems, suggestions are made from the aspects of system architecture, heterogeneous network interconnection, on-orbit intelligent information processing, Commercial Off-The-Shelf (COTS) products application, and intelligent autonomous management. This provides a guide for the related studies on the development of spacecraft avionics technology.

Keywords: Spacecraft avionics; System architecture; Development roadmap; Network interconnection; High-speed bus; Onboard computing; Autonomous operation; Software defined networking

*Corresponding author. *E-mail address:* chaojichen@tongji.edu.cn

Journal Pre-proofs

Journal Pre-proofs

1. Introduction[1]

The notion of avionics[1] was initially used for airplane avionics systems. At present, it is widely used in the design of electronic systems for spacecrafts. The avionics system is one of the platform subsystems of a spacecraft, serving as its brain, which efficiently manages data, analyzes information, integrates scheduling, and controls the system. As spacecrafts have evolved from individual units to constellations and ultimately to space-based networks, their avionics systems have increasingly emphasized networking, intelligence, and autonomy. However, because of the unique design of spacecraft avionics systems, the differences in information categories, and the various communication protocols, resource sharing cannot be performed between different types of applications within the spacecraft, the underlying software and hardware cannot be reused, and the interconnection and interoperability between different spacecrafts cannot be reached. Constructing an open intelligent avionics system architecture will be a feasible solution.

The space agencies are continuously studying the spacecraft avionics system, in order to meet the demands of the future space applications and the rapid advancements in information technology. The U.S. Air Force Research Laboratory (AFRL) proposed the Space Plug-and-play Avionics (SPA) system aiming to increase the ability of the spacecraft to quickly respond. The European Space Agency (ESA) created the Space AVionics Open Interface aRchitecture (SAVOIR) avionics architecture in an effort aiming to unify the design of spacecraft information systems. Airbus initiated the avionics architecture referred to as Open Modular Avionics Architecture for Space Applications (OMAC4S) aiming to reduce the cost of electronic devices and enhance their maintainability. NASA released the Distributed Integrated Modular Avionics (DIMA) architecture standard for the Artemis Return to the Moon mission in order to guide the design of avionics system, as well as the avionics architecture referred to as Modular Unified Space Technology Avionics for Next Generation (MUSTANG) to conduct modular satellite design. It also implemented an avionics architecture based on the software-defined technology in its Blackjack, SmartSat and other programs. In addition, due to the technological benefits of the constellation system, SpaceX successfully completed the mass production and the launch of its Starlink satellites, which will revolutionize the future satellite application models.

Due to the future spacecraft requirements for high-speed computing, lightweight design, and function diversification, the avionics system is continuously becoming crucial, especially that its design quality significantly affects the overall performance of the spacecraft. The main challenges of the avionics systems include making the spacecraft manageable, useful, and user-friendly, as well as the all-round support of future space applications. It is expected that the future spacecraft will be able to autonomously complete complex tasks, conduct health monitoring and fault handling in order to minimize the amount of work associated with ground operation. The successful application of new technologies, such as artificial intelligence and cloud computing, in the industrial field laid a solid foundation for the advancement of the spacecraft avionics technology. Thus, space organizations are continuously promoting the use of new technologies in space missions.

This study focuses on the networked, intelligent, and autonomous requirements of the spacecraft avionics system, analyzes the architecture of typical spacecraft avionics systems, and reviews the research status of spacecrafts. It details characteristics and development trends of the avionics system technology from five aspects: network interconnection, high-speed bus, onboard computing, autonomous operation, and software-defined technology. It then presents the development roadmap, intelligent system architecture and typical application scenarios of the avionics system. Finally, it provides development suggestions for spacecraft avionics systems, taking challenges faced by the current ones into consideration.

2. Research status of spacecraft avionics system

2.1. System architecture

Typical foreign spacecraft avionics system architectures include SPA, SAVOIR, OMAC4S, DIMA, and MUSTANG.

Journal Pre-proofs

The spacecraft avionics system of China has also made some progress in terms of distributed architecture and SPA technology.

2.1.1. Avionics architecture worldwide

To solve the problem of quick response in space, the AFRL proposed a space plug-and-play avionics architecture known as SPA[2]. This architecture started as conceptual study in 2004. Flight tests were then conducted in 2007 and 2009[3], to finally evolve to the Modular Open Network ARCHitecture (MONARCH) in 2011[4]. A schematic diagram of the SPA architecture is shown in Fig. 1[5]. Note that this architecture is similar to the USB interface standard. It consists of components, self-organizing network, plug-and-play middleware, and different types of applications. Its software middleware mainly consists of the data manager, task manager, processor manager, and sensor manager. It can automatically and quickly discover the inserted component and configure the services it provides. Relevant standards supporting the SPA technology have been developed by the American Institute of Aeronautics and Astronautics (AIAA) and the Consultative Committee for Space Data Systems (CCSDS)[6]. Using the SPA technology, the mechanical, electrical, and thermal interfaces of spacecrafts should be unified, enabling the quick production, assembly, testing, and maintenance, which allows to significantly reduce the time needed for the development of a new spacecraft.

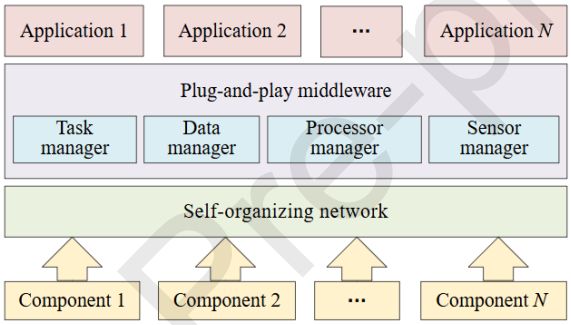

Fig. 1 Schematic diagram of SPA architecture.[5]

ESA presented the SAVOIR architecture in 2007 to meet the low-cost and high-performance needs of space avionics systems, paving the way for further missions, including the Earth observation and scientific space exploration. This architecture aims to reduce the spacecraft design time while enhancing the interchangeability and reusability of the device. Fig. 2 shows the SAVOIR reference architecture[7-8]. Its protocol integrates many standards, such as the CCSDS standard, and European Cooperation for Space Standardization (ECSS) standard. This is performed by combining multiple protocols to accomplish the system functions. The hardware consists of intelligent sensors and actuators, data storage, on-board computers, payloads and instruments. Different devices are connected through several buses, including 1553B, SpaceWire, and Time-Triggered Ethernet (TTE). The software adopts a layered architecture and a time-space partitioning operating system, and its design adopts software components that can be assembled.

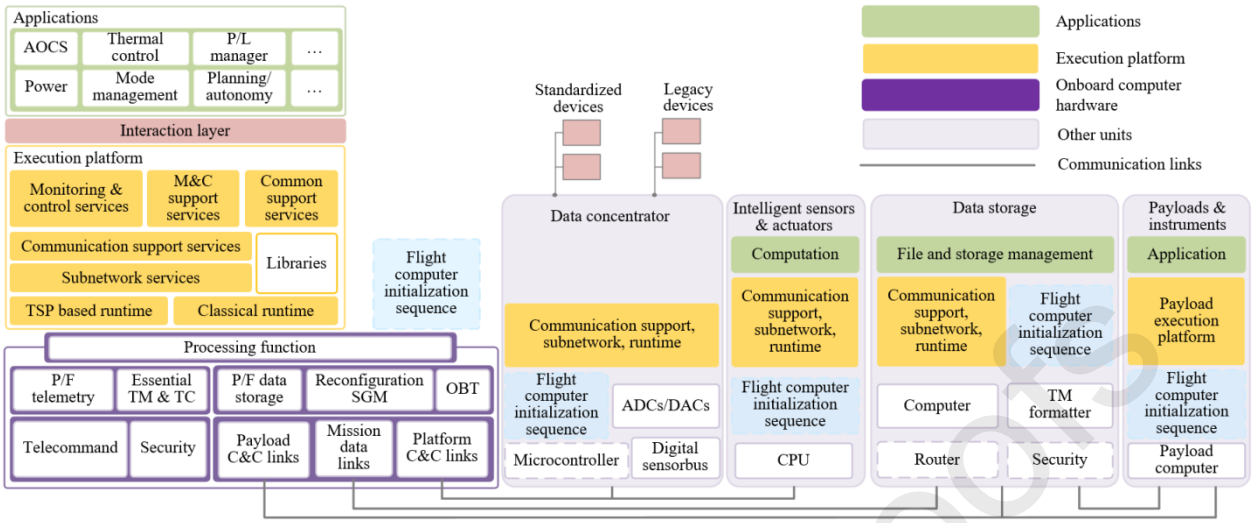

Fig. 2 SAVOIR reference architecture.[7,8]

Airbus and TTTech initiated an open modular architecture for spacecraft avionics systems referred to as OMAC4S. Its architecture is shown in Fig. 3[9]. It uses commercial backplane standards to make the system highly modular, adopts TTE as the backbone, employs a multi-core CPU and a time-space partitioning operating system to increase the computer performance. The software is designed to support standard services, such as PUS and APIs for applications. This design ensures that each function is an independent interchangeable Line Replaceable Unit (LRU) having all the interfaces, software, and hardware needed to reach its intended purpose. The LRU modular design allows the rapid replacement at the operating area, which can significantly enhance the system maintainability and reduce the maintenance costs.

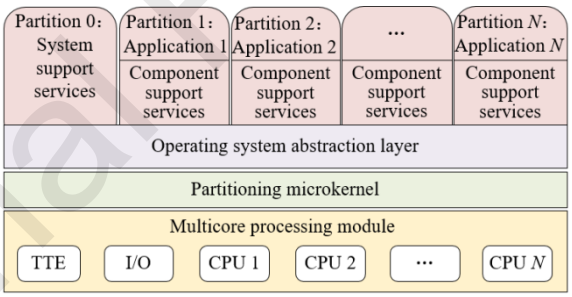

Fig. 3 OMAC4S architecture.[9]

NASA announced the Artemis program, a mission to return to the Moon, which includes sending astronauts to the south pole of the moon paving the way for human exploration of Mars. The program involves the successive launch of manned spacecraft, lunar surface landers, and lunar orbital space stations. They then released seven interoperable standards for avionics, communications, environmental control, energy, robotics, rendezvous and docking, and thermal control, which are used to guide the design of the Lunar Gateway space station, serving as a transit station and supply hub for the program. Fig. 4 shows the Distributed Integrated Modular Avionics (DIMA) architecture[10-11] used in its avionics interoperable standard. This architecture is advantageous in terms of size, weight, and power, allowing the functional integration with less hardware using TTE bus as the backbone network and widely applying the CCSDS standard protocols.

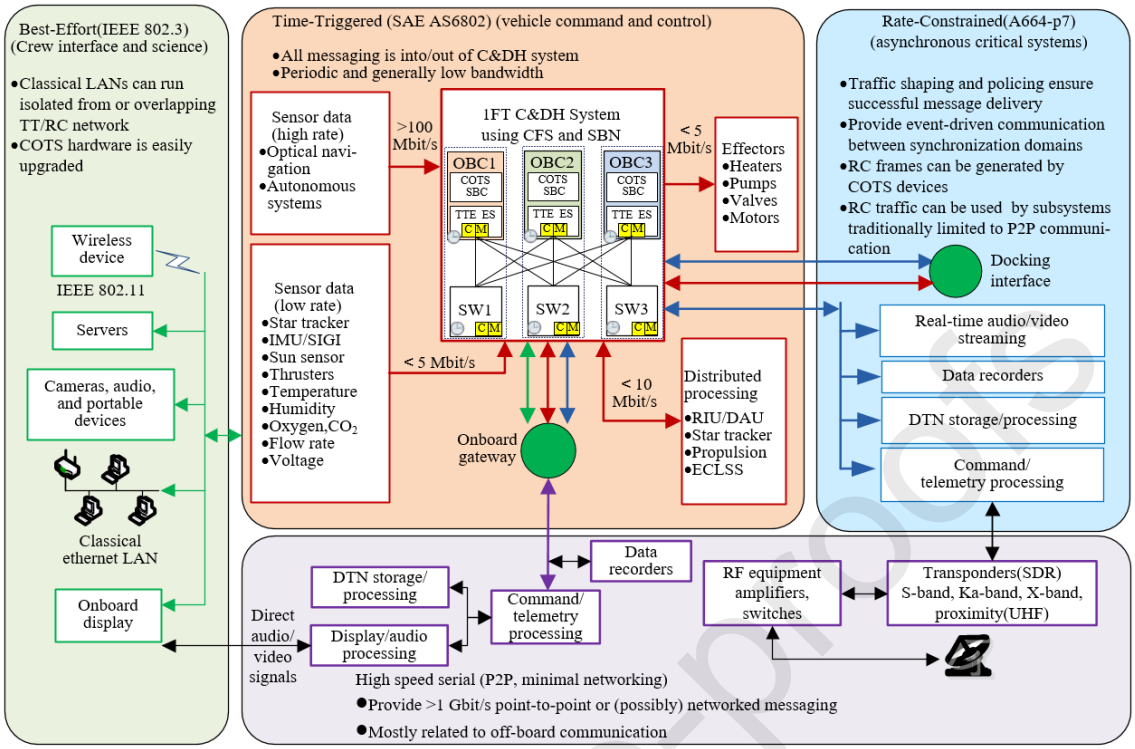

Fig. 4 Lunar Gateway avionics system architecture. [10,11]

NASA proposed a backplane-less MUSTANG avionics system architecture[12]. This architecture provides a set of hardware boards and an avionics platform to satisfy the most typical needs of data processing and electronic systems for spacecrafts. It is designed for being as modular as possible, allowing quick design while reducing the underlying costs through hardware hybrid integration. Although it has compact size and several restrictions, the MUSTANG architecture is widely adaptable to the design of avionics systems for medium and large spacecrafts.

2.1.2. Avionics architecture in China

Spacecraft avionics systems are derived from the integrated modular avionics system architecture, which has evolved through discrete, joint, integrated, and advanced integrated stages. At present, the DIMA architecture[13-14] is the development direction for the next generation of avionics systems. In order to meet the development needs for avionics systems, Zhou et al.[15] developed a resource scheduling algorithm for the DIMA system based on Time-Triggered Ethernet, aiming to achieve minimal end-to-end latency at the partition level. Liu and Wang.[16] compared the features of distributed and centralized satellite avionics architectures. They also proposed a design strategy for hardware modularization and software componentization. Liu et al.[17] proposed a distributed avionics system architecture and validated it in orbit. They also analyzed key technologies, including the parallel computing, distributed storage, and related space information network protocol. A centralized avionics architecture was proposed by Jiang et al.[18] for CubeSats, which had been functioning well on the TianQi-2 satellite for more than three years. Chen et al.[19] proposed an intelligent avionics architecture for low-cost and highly reliable spacecraft based on COTS technology. Future developments in spacecraft avionics system will focus on low cost, high performance, high intelligence, high integration and high reliability. He et al.[20] introduced a spacecraft avionics system architecture and detailed its implementation strategy from three aspects: hardware modularization, service and protocol standardization, and software layering and componentization. This provided suggestions for the design of the spacecraft avionics system.

To enhance the generalization, intelligence, and networking level of satellite avionics system, Liu et al.[21] proposed an avionics system architecture as shown in Fig. 5, which is based on high-speed and low-speed hybrid buses,

generalized hardware modules, and software components to form a set of standard functional units that can be selected on demand, so as to realize the ability of shelf-style assembly of avionics systems and task migration between various units. The system network bus consists of ARINC659, 1553B, and SpaceWire. The ARINC659 bus is used to communicate between hardware modules in the unit, the 1553B bus is used to ensure the reliable transmission of key data to other systems, and high-speed data interaction between the payload device and the platform is realized by the high-speed routing unit and the SpaceWire bus.

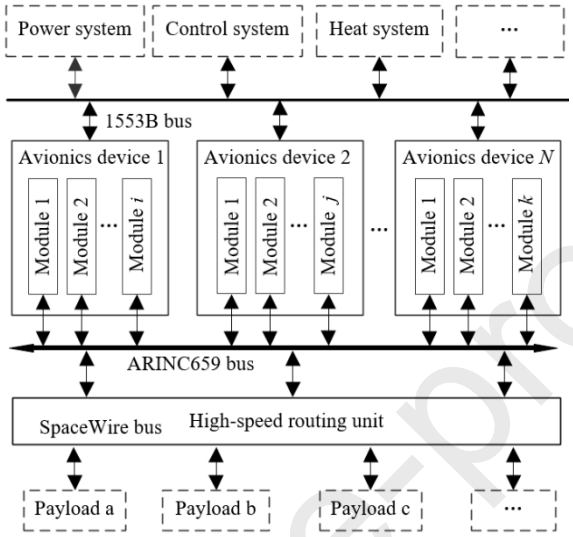

Fig. 5 Avionics architecture based on high and low speed hybrid networks.[21]

Liu et al.[22] presented an avionics system design as illustrated in Fig. 6 to meet the demand for lightweight, high-reliability, and high-performance computation in the manned lunar exploration spacecraft. According to the concept of network integration, universal computing, integrated execution, and software store-based loading, the three-level control structure of "system-subsystem-area execution" of traditional spacecraft is simplified to a two-level control structure of "unified system management-area execution." Configuring numerous high-performance computers achieves system-level unified management, and TTE switches enable the integrated transmission of high-speed and low-speed mixed data. The execution service units, which are made up of standard hardware modules, are configured by area in accordance with the acquisition and driving needs.

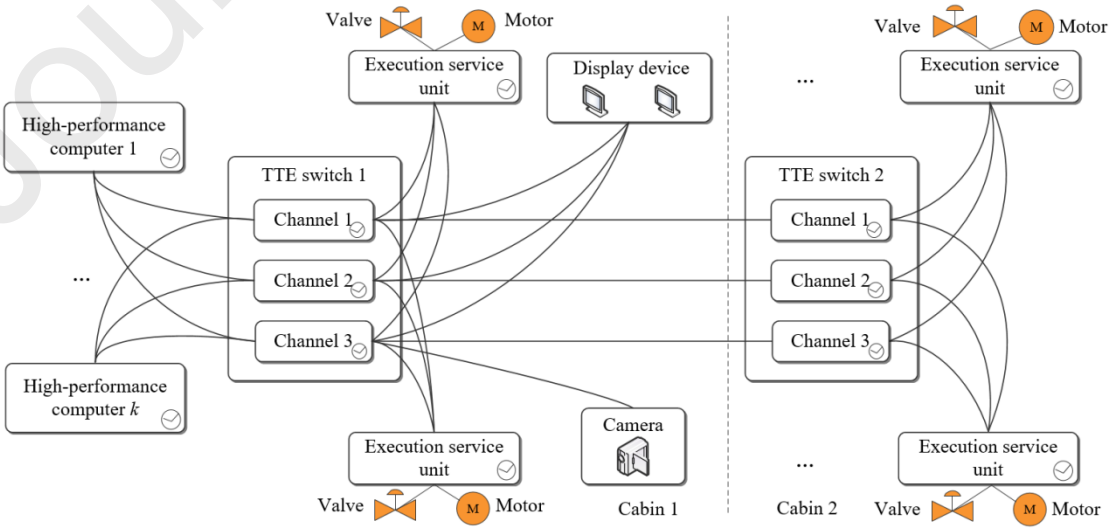

Journal Pre-proofs

Fig. 6 Avionics architecture of manned lunar exploration spacecraft.[22]

Gao et al. proposed a system architecture of a satellite intelligent computing platform to address the issue of difficult computing resource sharing and insufficient autonomous management capability of low-orbit satellites. The hardware architecture is shown in Fig. 7[23], and it primarily consists of the main control module, storage module, routing and switching module, and computational processing module. Among them, the main control module is used to realize state monitoring and comprehensive scheduling of other modules, while the routing and switching module facilitates data exchange between modules and data transmission between payloads. The computing processing module is composed of FPGA, CPU, GPU, NPU, etc. Through hardware virtualization technology, a unified computing resource pool is formed to provide intelligent computing power support for image processing, AI computing, etc. The various modules interact with each other through CAN, Ethernet, and so on.

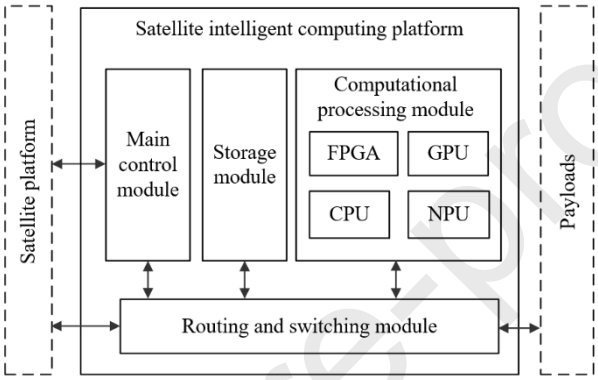

Fig. 7 Hardware architecture of satellite intelligent computing platform.[23]

2.1.3. Analysis of research status

It can be deduced from the comparison between the aforementioned spacecraft avionics system architectures (Table 1) that the SPA, SAVOIR, OMAC4S, DIMA, and MUSTANG open modular system architectures exhibit the same design principles. They all aim at reducing the system costs while increasing the flexibility and maintainability of the spacecraft avionics system through standardized and modularized design. However, each type of architecture has a distinct focus in terms of many factors, including the design concepts, integration methods, and application scenarios. The SPA architecture simplifies the system integration for spacecrafts that require routine maintenance or updates. However, it may make the system design and verification more difficult because of its inter-module compatibility. The SAVOIR architecture, which emphasizes the design of open interfaces for space electronics and focuses on interoperability and information sharing among different systems, is the most suitable for complex and large-scale space missions requiring collaborative work. However, it may complicate the system integration in order to ensure the universality and compatibility of the underlying interfaces. By providing backup components, the OMAC4S architecture emphasizes modular design and component interchangeability, which may increase the complexity of the system while facilitating the quick replacement and maintenance of electronic devices. The DIMA architecture uses functional synthesis and physical distribution to increase the reliability of the system. This makes it more appropriate for the design of avionics systems of large and complex spacecrafts, at the expense of increasing the complexity of the system because of the contradiction between synthesis and distribution. The MUSTANG architecture provides solutions for next-generation space avionics systems by striking a compromise between the compactness of the spacecraft structure and its maximum functionality through a unified modular design without backplanes. However, the inter-module interactions make the system design and verification more complex. Among the aforementioned architectures, SAVOIR and DIMA are the most widely studied and adopted. They are the mainstream architectures currently used by NASA and ESA. Note that it is expected to widely use the MUSTANG architecture in future satellites.

Table 1 Comparison between avionics architectures of spacecrafts.

Journal Pre-proofs

Architecture	SPA	SAVOIR	OMAC4S	DIMA	MUSTANG
Name	Space Plug-and-play Avionics	Space AVionics Open Interface aRchitecture	Open Modular Avionics Architecture for Space Applications	Distributed Integrated Modular Avionics	Modular Unified Space Technology Avionics for Next Generation
Proposer	AFRL[2-6]	ESA[7,8]	Airbus, TTTech[9]	NASA[10,11]	NASA[12]
Year	2004	2007	2013	2018	2019
Advancement	Supports hot-plugging and quick assembly, simplify maintenance and upgrades.	Data sharing and interoperability between different modules can be accomplished using modular and open architecture.	Its use for modular and open architecture makes the system flexible and emphasizes the reuse of hardware and software.	Distributed and integrated architecture with features of physical distribution and functional integration.	Open architecture and backplane-less modular design optimize the functionality in a very small size.
Openness	Support a wide range of devices and interfaces	Emphasizes the interface standardization and openness.	Support the use of open standards, and different modules can be seamlessly integrated.	Standardized interfaces support good openness.	Support standardized interfaces and protocols.
Reliability	Rigorous testing is required to ensure compatibility and reliability.	Increase the reliability through standardized interfaces and redundant design.	Increase the reliability through standardized interfaces and redundant design.	High reliability due to distributed architecture and fault isolation.	Increase the reliability through standardized interfaces and redundant design.
Complexity	Complex design and verification	Complex system integration	Complex inter-module interaction	Complex initial system design	Complex system integration
Scalability	Easy to expand and maintain	Easy to expand and maintain	Easy to expand and maintain	Easy to expand and maintain	Easy to expand and maintain
Economy	High costs for initial design and validation.	Modularization and standardization facilitate the cost reduction.	Modularization and standardization facilitate the cost reduction.	High cost of initial system design.	Modularization and standardization facilitate the cost reduction.
Scenario	Project of rapid design and rapid response.	Large project requiring multi-vendor integration and interoperability.	Highly modular and reusable project.	High-reliability project.	High-performance deep space exploration missions.

In China, the avionics system architecture of spacecrafts recently evolved from a centralized to a distributed networked direction. At present, it reached the stage of distributed integrated modularization, and relevant applications are actively explored in terms of plug-and-play technology. The main features of the avionics system architecture comprise the hardware modularity, protocol standardization, and software componentization. In the future, to meet the growing demands for computing intelligence, service diversification, and communication integration, spacecraft avionics systems will prioritize enhanced networking, intelligence, and autonomy while also improving the usability and operational convenience.

2.2. Typical spacecrafts

The design solutions for typical spacecraft avionics systems in the fields of deep space, manned, remote sensing, communication, navigation, and small satellites were investigated both domestically and internationally. In each field, the key traits and development trends of spacecraft avionics systems were studied and compared.

2.2.1. Foreign spacecrafts

In the manned spacecraft field, the information system of the International Space Station, which has over 100 computers, is mainly responsible for data collection, command transmission, and network administration of payloads and platforms. The avionics system of each cabin uses a hierarchical bus and implements redundancy and generalization in computer design at every level according to functional needs. These features facilitate the system

expansion and maintenance. For instance, the avionics system of the U.S. Experiment Module is arranged in three layers[24-25]. The control layer is the first layer that coordinates the management of the systems of the space station, the regional control layer is the second layer that handles the application tasks for the subsystems, and the user layer is the third layer that manages local data acquisition and control.

The U.S. Defense Advanced Research Projects Agency (DARPA) proposed the Blackjack program, which is a low-orbit constellation providing continuous global coverage at very low cost. Pitboss is the on-board control unit having a high-speed processor and an encryption device. It is considered as the central component of the satellite, as illustrated in Fig. 8[26-27]. The satellite can be software-defined to quickly and autonomously perform tasks such as target identification, on-orbit data processing, and data encryption. By collaborating with other satellites, it can handle long-term autonomous operation of the constellation. In addition, the SmartSat satellite developed by Lockheed Martin adopts a software-defined architecture, which allows the users to add functions and assign new tasks. Moreover, it has adjustable satellite bandwidth, and it can support changing the satellite coverage area according to task requirements.

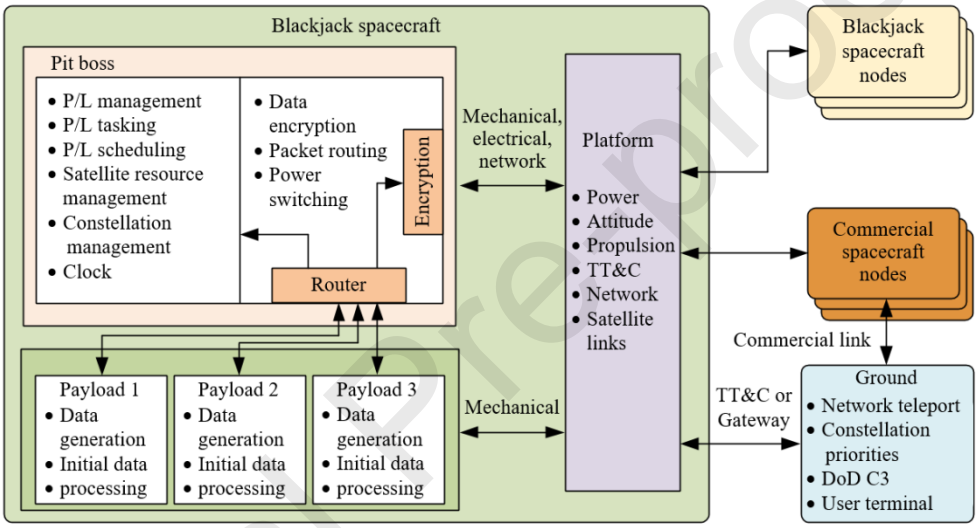

Fig. 8 Architecture of the Blackjack satellite.[26,27]

In the communication field, satellites demonstrate a development trend of large-scale, serialization, and high cost-effectiveness. The integrated, generalized, and flexible design of the device allows to decrease the expenses and production time. Typical satellite platforms include the LM2100 of Loma[28] and the NeoSAT of ESA[29]. Through integrated and generalized design, the LM2100 platform reduced the components variation and production time by 56% and 28%, respectively. The on-board computer and remote interface unit of its avionics systems are constructed using radiation-hardened PowerPC. The on-board computer can be modified on orbit, and the remote interface unit has 1.5-2 times the integration degree of traditional devices. The NeoSAT platform includes Euro-StarNEO of ADS and SpaceBus of TAS, which have almost the same indices. This yields a 30% increase in the overall competitiveness compared with traditional platforms. It also has highly-integrated functionality and uses the all-electric propulsion technology to support heavier load weights. In the satellite internet field, more than 10000 Starlink satellites of the SpaceX company have been launched. The latest versions of these satellites have laser interplanetary links and optical imaging systems, which can perform flexible networking and autonomous debris avoidance in space.

In the navigation field, Galileo is a typical avionics system. The avionics system of the GIOVE-A satellite was launched in 2005. It is based on the GEMINI small satellite platform[30]. Its avionics system uses integrated, networked, and modularized design ideas, and the satellite is managed by a data management computer through CAN bus for data exchange. The next-generation Galileo system improves the accuracy of the signal and the autonomous operation capacity[31]. Satellites are equipped with laser interplanetary links to enhance the positioning and timing services of the system. In addition, the navigation payloads are distinguished by their high performance and safety, as well as their

configurable on-orbit functions. In order to form group intelligence and provide continuous services of high reliability, future navigation constellations will require satellites to cooperate and share resources.

In the deep space exploration field, the avionics system of the American Orion spacecraft adopts a distributed modular integrated system architecture. Fig. 9[32] illustrates the TTE bus serving as the system backbone network, connecting the remote unit and the on-board computer. This switched network architecture has high scalability, and new devices can join the system by only connecting to the switch[33]. With a high degree of system function synthesis, the on-board computer integrates several complex functions, including human-computer interface, autonomous heat control, autonomous energy control, and bus network management.

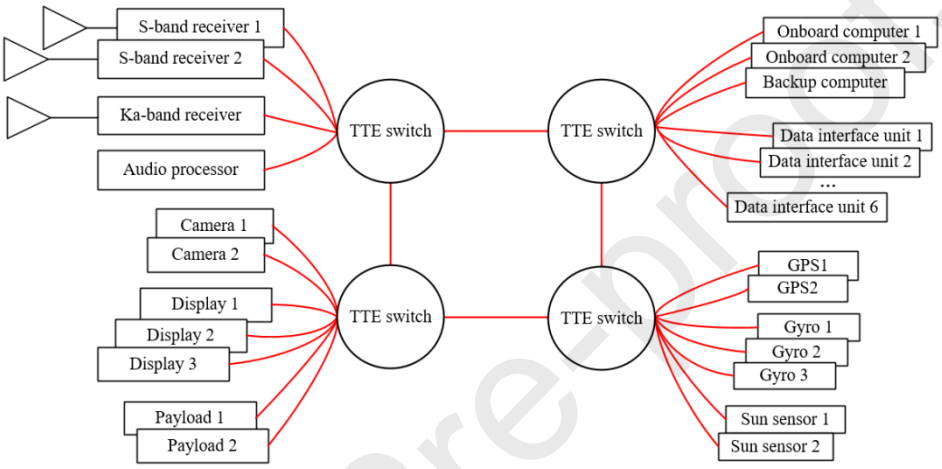

Fig. 9 Avionics system of Orion spacecraft.[32]

In the field of small satellites, the Surrey Satellite Technology of the UK launched the NovaSAR-1 satellite, constructed using the SSTL300 platform[34]. It uses integrated, networked, and modularized design ideas, and it also adopted a mature and highly-reliable avionics architecture. The platform computer adopts a radiation-hardened processor and performs unified data management through CAN bus. Customized Field Programmable Gate Array (FPGA) is used to process payload data, and COTS components are widely used to cut costs.

2.2.2. Spacecrafts in China

In the manned spacecraft field, the information system of the Chinese space station adopts a layered network architecture based on modular computers. According to different types of information, its network is divided into system, communication, and payload networks, as shown in Fig. 10[35]. These kinds of networks are connected by gateways. The system network is based on the 1553B bus to perform system management of the platform. The communication network is based on Gigabit Ethernet, mainly designed for astronaut information service, and the payload network uses 10 Gigabit Ethernet to make the payload data management more straightforward. In addition, the information system of the manned spacecraft consists of highly-reliable computer, remote terminal, and communication bus, and it adopts several measures to satisfy the mission requirements, such as hardware redundancy and crucial data backup.

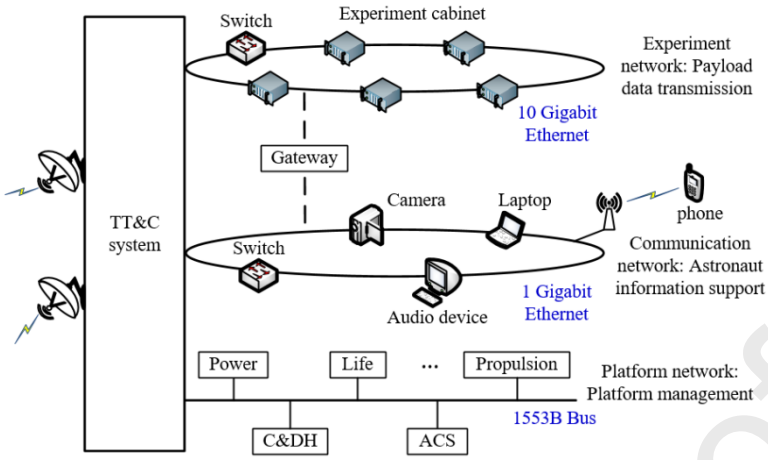

Fig. 10 Architecture of the China space station network.[35]

In the remote sensing field, Yang et al.[36] proposed an intelligent remote sensing satellite system that consists of remote sensing satellites, satellite-ground networks, and cloud service centers. This system mainly aims at constructing an on-orbit open software platform to facilitate the flexible access of third-party applications. This platform can also be used to acquire and process on-orbit images based on user needs. The information system of the Resource One 02D satellite[37] constructed a high-speed and low-speed distributed network, including 1553B, LVDS, and TLK2711 buses. The low-speed network was mainly used to transmit platform information, while the high-speed network was used to transmit camera images and data between the underlying devices. Lei et al.[38] argued that the avionics system of further remote sensing satellites would consist of a lightweight, generalized, and hierarchical software architecture as well as an open, intelligent, highly-integrated, and high-computing hardware architecture.

In the communication field, China's first global high-throughput broadband satellite, which is referred to as Asia-Pacific 6D, developed a distributed avionics system having a central computer as its core[39]. It performed unified satellite management through 1553B bus, and solved the problem of heavy cable and many payloads by hardware integration and modularization, yielding a cable weight reduction of 50%. It increased the capacity of the satellite for on-orbit autonomous operation by adopting almost 20 software-defined functions, including autonomous sun tracking and autonomous temperature control. Based on the Dongfanghong V satellite platform, the Shijian 20 communication satellite[40] was developed using modular, scalable, fully autonomous, and intelligent design concepts. It developed a distributed avionics system having a Central Management Unit as its brain, an Integrated Service Unit as execution terminal, and the 1553B bus as core network. Many autonomous functions, such as autonomous data management and autonomous fault disposal, are have been widely used. In addition, the successful launch of the satellites of the StarNet Constellation[41] and the Qianfan Constellation[42] paved the way for the deployment stage of China's satellite internet program.

In the navigation field, the BeiDou-3 satellite developed a hierarchical distributed avionics system having the Central Management Unit as brain[43]. This allowed to perform unified scheduling and integrated information processing of the constellation, as well as the provision of dependable and stable services for users. The system mainly comprises the Central Management Unit (CMU), Interface Service Unit (ISU), and Dynamic Path Routing Unit (DPRU), as illustrated in Fig. 11[44]. The CMU performs the platform management, including data management, the ISU provides telemetry acquisition, command output, power distribution, and other services for different types of devices, and DPRU mainly performs the information fusion of spacecraft-earth communication and interplanetary links. Through the highly-integrated and portable compactness design of the avionics system, the weight was reduced by more than 30% compared with the traditional method.

Journal Pre-proofs

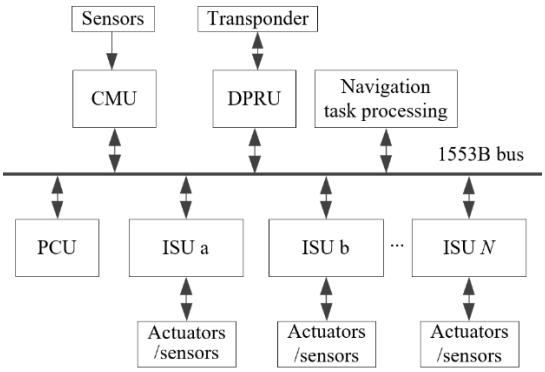

Fig. 11 Avionics architecture for navigation satellites.[44]

In the deep space exploration field, the avionics system of Chang'e-3 rover[45] was the first successfully deployed on-orbit avionics system, while the avionics architecture of Chang'e-4 lander[46] combined centralized and distributed methods, and it was characterized by its unique modularity, fault tolerance, and ease of expansion. The avionics system of Chang'e-5 orbiter optimized the resource sharing by configuring power, information, and radio frequency device modules[47]. This was accompanied by the reduction of the weight by almost 40% compared with the traditional architecture. The avionics system of the "Zhu Rong" Mars rover[48] in the "Tianwen" Mars spacecraft had many autonomous functions, including mission planning, navigation control, autonomous health management, and scientific exploration.

The Shijian 5 satellite is the first real small satellite in China[49], which built and validated a distributed avionics architecture. The avionics system of the Beijing III satellite[50] comprised the functions of many devices joined in one computer, serving as the satellite brain. The information management of the satellite was implemented by a CAN bus, yielding reduction of 60% and 20% in satellite quality and power consumption compared with the conventional approach, respectively. The architecture of the avionics system of small satellites has gradually evolved[51] from distributed to centralized, due to the advancement of the information technology. The internal high-speed bus of the device, which communicates with the underlying data through various mediums, such as CAN, 1553B, and SpaceWire, takes the place of the external bus, and its architecture illustrates a networked, intelligent, and integrated development trend of high-performance.

2.2.3. Analysis of research status

The avionics system plays a crucial role in the establishment of functions, performance increase, reliability improvement, and mission completion of spacecrafts. Typical spacecraft avionics systems in manned, remote sensing, communication, navigation, deep space, and small satellites are presented in Table 2. It can be seen that the features of the spacecraft avionics systems are mainly reflected in the following aspects:

(1) The system architecture is shifting towards distributed integrated modularity for complex spacecrafts and centralization for small satellites. However, they are also designed with higher functional density and computing power. For example, the International Space Station uses a layered network architecture to facilitate the system expansion, and its computers are highly integrated. The avionics systems of the Orion spacecraft and the Chang'e series lunar probe include physical distribution and functional integration. The avionics systems of small satellites, such as Beijing III and No-vaSAR-1, use centralized architectures, exhibiting tightly-integrated electronic devices.

(2) The novel hardware design of avionics systems emphasizes the modularity as well as the high performance and integration. The hardware devices are classified into a few types, such as on-board computers and remote units, and the system performs unified scheduling and resource management through switching networks. The modularization

Journal Pre-proofs

technology of the devices is more advanced, and standard modules are used to accomplish many tasks, such as telemetry acquisition, command output, drive control, heating control, and power distribution, which significantly reduces the variability of the hardware modules. Many technologies, including SoC and ASIC, are used to perform the integration and reach portable compactness of the devices. Consequently, their integration degree is increased by more than one time compared with the traditional methods. In addition, COTS components using radiation-hardened techniques are widely used to significantly increase the performance of the system and reduce the underlying costs.

(3) The software has lightweight, generic, and hierarchical architecture, using componentized design approaches. It adopts a layered system structure and a time-space partitioning operating system to facilitate the integration of multiple complex applications and the decoupling of hardware and software. It also enables the on-orbit software transplantation and software-defined functions through software componentized design, as well as the widespread use of standardization organization communication protocols, such as CCSDS. Complex system functions can be established by combining several standard protocols, leading to the development of a software design ecosystem that promotes multi-party collaboration and parallel design.

(4) The network architecture should support the hybrid transmission of high-speed and low-speed heterogeneous data. The CAN (or the 1553B bus) is a standard backbone network of the spacecraft avionics system, besides additional connections provided by other buses, including Ethernet, SpaceWire, and serial interfaces. The coexistence of multiple buses results in complex cable wiring and large system weight, which does not meet the portable compactness requirements of the spacecraft. Future spacecraft data buses should be flexible enough to expand and transfer data at high and low speeds. Time-deterministic Ethernet, such as the TTE or TSN bus, is a development trend that will be increasingly used.

(5) There is an increasing demand for the onboard high-performance computing and information processing capacity of spacecrafts. The on-orbit applications are becoming more complex, and therefore spacecrafts should be equipped with many features, such as on-orbit data management, mission planning, target recognition, and image processing. At present, the computing and storage capacities of spacecrafts are not able to meet the demand for intelligent and high-speed information services that will be needed by users in the future. This presents a new challenge for high-performance computing and information-processing capacities. As a result, many countries promote the upgrading of onboard computing capacities.

(6) The future spacecrafts will emphasize the intelligence and autonomy. Higher demands have been made on spacecraft autonomous operations due to the complexity of scientific missions, and avionics systems will increasingly be responsible for performing intelligent computing and autonomous management of tasks. To deal with the requirement of long-term on-orbit autonomous operation, spacecrafts should be able to accurately perceive changes in their own status and external environmental conditions by adopting novel technologies, including artificial intelligence, cloud computing, and software-defined technology. They should also be able to autonomously perform many tasks, such as mission planning, status monitoring, command execution, and autonomous on-orbit fault disposal.

(7) The development of future spacecrafts for remote sensing, communication, and navigation will require a cooperative constellation. The establishment of a cooperative constellation based on the principles of physical distribution, information integration, and intelligent cooperation provides the spacecraft with a longer measuring range[52], broader coverage capacity, and higher positioning accuracy in the fields of remote sensing, communication, and navigation. To increase the overall performance of the system, the constellation spacecraft can provide flexible networking, cooperative sensing, and quick response to dynamic tasks by forming team intelligence through information exchange and task collaboration.

Table 2 Features and development trends of typical spacecraft avionics.

Journal Pre-proofs

Fields	Country/ organization	Typical spacecrafts	Key features	Development trends
Manned	USA, Russia, Japan, etc.	International Space Station[24,25]	Hierarchical bus architecture and generalized computer.	It adopts layered distributed network architecture, highly integrated electrical systems, and generalized computation.
	China	Chinese space station[35]	Its network includes system network, communication network, payload network, and generalized computer.	
Remote sensing	USA	Blackjack spacecraft[26,27]	It uses software-defined architecture and has powerful computers facilitating the quick reaction.	Hardware architecture tends to be intelligent, highly integrated, and of high performance, while software architecture tends to be software-defined, generalized, and layered.
	China	Resource One 02D satellite[37]	Adopts a distributed information network using buses of different speeds.	
Communication	USA	LM2100 platform[28]	The integration degree is 1.5-2 times that of the traditional system, which is reached using integrated and generalized architecture.	On the one hand, the satellite platform presents a large-scale high-payload ratio development trend, which results in significantly increasing the load capacity. On the other hand, the low-orbit communication satellite Internet has become a hotspot. The Starlink is the world's leading system, and China also started to construct the satellite internet.
	ESA	NeoSAT platform[29]	Exhibits a 30% increase in overall competitiveness compared with traditional platforms, as well as highly-modular payloads and very high integration level.	
	USA	Starlink satellite	It has laser interplanetary links and optical imaging systems, enabling flexible networking and avoiding autonomous space debris.	
	China	Asia-Pacific 6D satellite[39]	It uses a distributed avionics system having software-defined and autonomous operation capacities.	
	China	Dongfanghong V platform[40]	It uses a modular, scalable, fully autonomous, and intelligent distributed avionics system.	
	China	StarNet[41] and Qianfan satellite[42]	It marks the beginning of the deployment stage of China's satellite internet program.	

Journal Pre-proofs

Fields	Country/ organization	Typical spacecrafts	Key features	Development trends
Navigation	UK	Galileo satellite[30]	It uses a modular, networked, and integrated architecture to increase the accuracy of the signal and the ability to autonomously operate.	It is characterized by integration, networking, modularization, and configurability of on-orbit functions. Consequently, the future navigation constellations will be able to share resources and collaborate on work.
	China	BeiDou-3 satellite[43,44]	It uses a hierarchical distributed system architecture that reduces the weight by more than 30%. It is lightweight and has high integration ability.	
Deep space exploration	USA	Orion spacecraft[32]	It has a distributed modular integrated architecture and a flexible access based on TTE switching network.	The system architecture is distinguished by its physical distribution, modularity, and high fault tolerance.
	China	Chang'e series of spacecraft[45-47]	Its features include modularity, high fault tolerance, autonomy, and portable compactness.	
Small satellite	UK	SSTL300 platform[34]	It adopts integrated, networked, and modular design, and widely uses COTS products.	It mostly uses centralized architecture and exhibits a trend of high integration, networking, intelligence, and commercialization.
	China	Beijing III satellite[50]	The function is highly integrated, with information exchange facilitated by an internal bus.	

3. Key technologies and trends

The aforementioned research status demonstrates that the avionics system, which serves as a spacecraft information center, played a crucial role in practical applications. However, some key technologies have room for improvements. Fig. 12 summarizes the evolution of key technologies in terms of network interconnection, high-speed bus, onboard computing, autonomous operation, and software-defined technology.

Journal Pre-proofs

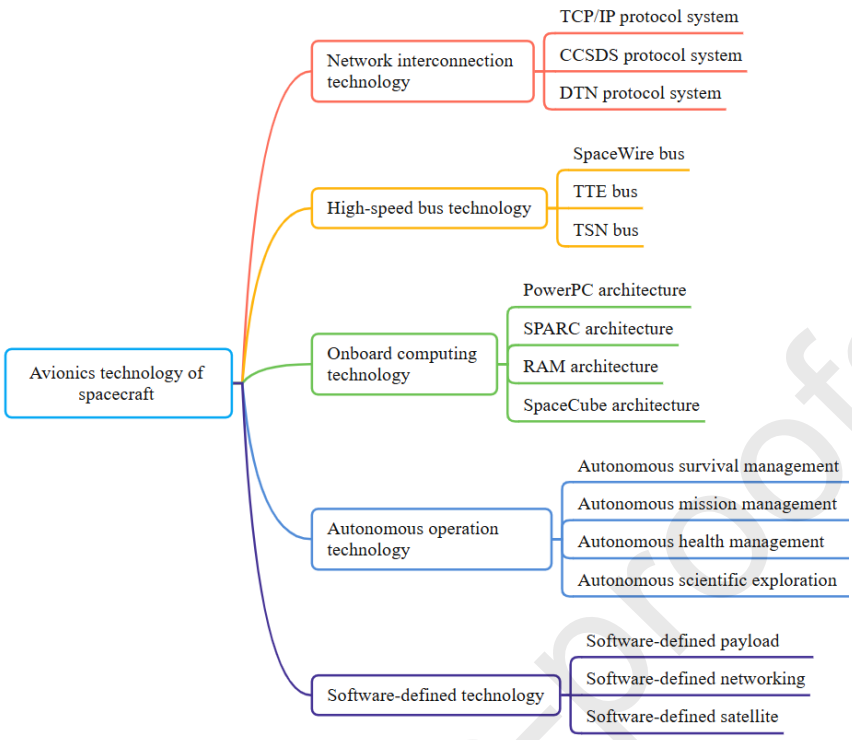

Fig. 12 Key technologies of spacecraft avionics.

3.1. Network interconnection technology

The spacecraft network interconnection technology performs network connection and information interaction between different spacecrafts as well as between the spacecraft and the ground. The three main types of spacecraft network interconnection protocol systems are the Transmission Control Protocol/Internet Protocol (TCP/IP), Common Carrier Switching Data System (CCSDS) protocol, and Delay/Disruption Tolerant Network (DTN) protocol[53].

(1) TCP/IP protocol system

The TCP/IP protocol system started in the 1960s and then evolved into the most widely used computer interconnection protocol in the 1990s. The protocol stack consists of five layers: application, transport, network, data connection, and physical layers. Although this protocol exhibits simplicity and flexibility, it only provides "best-effort" services, and thus the high quality of data transmission cannot be ensured. The use of the IP technology in space communications started after the rapid development of terrestrial Internet. In 2002, NASA launched the OMNI project, which integrated terrestrial and space networks and performed all-IP interconnections from spacecraft to terrestrial users. Conducted on-orbit tests then demonstrated the possibility of using IP protocols[54] in space missions.

(2) CCSDS protocol system

The CCSDS protocol system is designed for space communication. It includes a series of protocols from the data link layer to the application layer, while each one includes a certain number of protocols that can be combined, such as the Advanced Orbiting System (AOS) protocol and CCSDS File Delivery Protocol (CFDP)[55]. Although the CCSDS protocol, which is has been applied and verified in more than 1000 spacecrafts, is more refined, it cannot be directly connected to the ground network. CCSDS undergone many adjustments and upgrades for space communication

protocols in order to keep up with the rapid development of terrestrial Internet. The "IP over CCSDS" standard, released in 2012, allows to transmit IP data through space communication links.

(3) DTN protocol system

Fall et al. proposed the DTN protocol for the interplanetary Internet. In contrast to the conventional terrestrial Internet, this protocol has a bundle layer between the application and transport layers. This layer enables the interoperability of the underlying protocols, such as TCP/IP and CCSDS. Due to the fact that the DTN uses the store-and-forward approach, Bundle Protocol (BP) in the Bundle layer can provide permanent storage and transport. In other words, data can be permanently stored on a DTN node[56] until it is successfully sent to the next hop node through the BP protocol. Thus, this is the ideal solution for network communications between nodes in deep space exploration missions. NASA used it to build an interplanetary Internet. They then conducted many experiments demonstrating that the DTNs can successfully function over links of high latency and disruption.

China conducted many studies on CCSDS protocols. In order to unify the space network with the internal network of the spacecraft, the Beijing Institute of Spacecraft System Engineering integrated the subpacket remote control protocol, AOS protocol, space packet protocol, and asynchronous messaging protocol that are established in CCSDS and ESA's PUS standard. They also developed the "Fuxi" software architecture for the spacecraft, which is compatible with this architecture, and published the first CCSDS standard proposal of China[57]. Other organizations also significantly contributed to space networking technologies. For instance, Tsinghua University studied the use of the IPv6 protocols in space, and developed several space protocols, such as the Open Shortest Path First (OSPF+)[58]. Nanjing University also studied DTN protocols and developed a network simulation system.

In summary, the CCSDS protocol system is reasonably developed, and it has been widely used in the spacecraft field. However, it cannot be directly connected to the terrestrial Internet. The TCP/IP protocol is able to reduce the building and maintaining costs. However, it is unsuitable for deep space communication. The protocol system that combines TCP/IP with CCSDS has these two advantages. However, it cannot solve many problems, such as the dynamic routing in deep space communication. The DTN protocol system is proposed and used in deep space communication. It can integrate the CCSDS protocol stack and lower layer protocols (e.g., IP and AOS) in the TCP/IP protocol stack through the bundle layer. This allows to interconnect many heterogeneous networks, and provides advantages compared with network systems, in terms of compatibility and extensibility. The system that integrates CCSDS, TCP/IP, and DTN will be adopted in future spacecraft network protocols.

3.2. High-speed bus technology

The spacecraft performs the information exchange and data transmission between computer and terminal devices through a data bus. At present, CAN, 1553B, SpaceWire, Ethernet, TTE, and Time-Sensitive Networking (TSN) are data buses that can be typically used in spacecrafts. Note that CAN and 1553B are low-speed buses while the others are high-speed buses. Table 3[59-60] shows a comparison between these buses. The main features of the SpaceWire, TTE, and TSN buses are summarized as follows:

Journal Pre-proofs

(1) SpaceWire bus: It is a high-speed bus developed by ESA to be mainly used in spacecraft applications. It has a very flexible topology, point-to-point full-duplex communication ability, enhanced fault and error detection, exception handling, and high timing accuracy. SpaceFibre is the next generation of SpaceWire, which can transmit data at speeds of up to 1 Gbit/s.

Table 3 Comparison between spacecraft data buses.

Features	CAN	1553B	SpaceWire	Ethernet	TTE	TSN
Topology	Bus structure	Bus structure	Point to point/ switched structure	Point to point/ bus or switched structure	Point to point/ switched structure	Point to point/ bus or switched structure
Node number	≤128	≤32	No limit	No limit	No limit	No limit
Scalability	no	no	Expansion through switch	Expansion through switch	Expansion through switch	Expansion through switch
Rate	Max 1 Mbit/s	1-10 Mbit/s	2-400 Mbit/s, 1 Gbit/s with fiber	10 Mbit/s, 100 Mbit/s, 1 Gbit/s	100 Mbit/s, 1 Gbit/s	10 Gbit/s/, 25 Gbit/s
Maturity	Widely used	Widely used	Widely used	Widely used	Start using	Start using
Application scenarios	Automotive, electronics, spacecraft	Aviation, spacecraft	Aviation, spacecraft	Every field	Automotive, aviation, spacecraft	Automotive, electronics

(2) TTE bus: It is a type of time-deterministic Ethernet created by the TTTech company. It incorporates time-triggered modes to the event-triggered modes of conventional Ethernet, which allows to meet the low time-delay requirements of some control systems while remaining widely compatible with the current Ethernet standards. Applications for the TTE bus in spacecrafts can be tackled through a single bus network that combines high-speed and low-speed data transmission. The TTE bus has been successfully applied in the Orion spacecraft of the US. It also serves as the backbone network in the spacecraft of NASA's Lunar Gateway.

(3) TSN bus: It is based on the Audio Video Bridging (AVB) technology, designed to perform deterministic real-time Ethernet-based video/audio data transmission over Ethernet. Time-sensitive data transmission can be performed with very low end-to-end latency and transmission reliability through many methods, including clock synchronization and bandwidth reservation. The IEEE 802.1 working group renamed AVB to TSN[61-62]. Its current application scenarios are extended from audio and video data transmission to other fields, such as automotive, electronics, and spacecrafts.

For a long period of time, CAN and 1553B buses have been the primary data buses used in spacecrafts. However, due to their limited communication rates, they cannot handle the demands of real-time communication of the massive volumes of data that future spacecrafts will require. TTE buses have been used in many applications, including automobiles, aircrafts, and spacecrafts. They are considered a new network technology that combines high bandwidth, high reliability, and high certainty. The TTE bus can fulfill the demand for mixed transmission of data with different rates and levels of certainty on a single network. In addition, they can be used as the backbone bus selection form for the future spacecrafts. Similarly, due to its deterministic switching technology, which considers forward compatibility with current Ethernet switching, the TSN bus is easily accepted by the industry. As a result, it has started to be used in industry and will probably have a larger market in the future[63]. However, the relevant standards and products of the TSN bus are currently being developed and refined, and their suitability for use in spacecrafts should still be evaluated.

3.3. Onboard computing technology

The onboard computing technology serves as the foundation of the spacecraft to perform information services and on-orbit processing. In addition, the space-grade processor is the core of reaching high-performance onboard computing. Table 4 shows the onboard computing technology using space-grade Central Processing Unit (CPU). NASA started conducting studies as early as the 1970s, which resulted in the development of the RAD750, RAD5545, and other Performance optimization with increased risc Performance Computing (PowerPC) architectures of the space-grade processor. The RAD750 processor[64], which has 400 DMIPS of computing capacity, is widely used in all the types of NASA spacecrafts. The RAD5545 processor[65], which integrates four processing cores and has floating-point

Journal Pre-proofs

computing capacity of almost 3.7 GFLOPS, was used for the Mars mission.

Table 4 Typical space-grade processors.

CPU name	Year	Country/ organization	Main frequency/MHz	CPU cores	Computing ability	Architecture
TSC695F Error! Reference source not found.	1998	ESA	25	1	20DMIPS	SPARC
RAD750	2001	USA	200	1	400DMIPS	PowerPC
GR712RC	2009	ESA	100	2	200DMIPS	SPARC
RAD5545	2015	USA	466	4	3.7GFLOPS	PowerPC
GR740	2017	ESA	250	4	1700DMIPS	SPARC
DAHLIA	2019	ESA	1600	4	4000DMIPS	ARM
HPSC	2019	USA	800	8	14720DMIPS	ARM
BM3803 Err						

Since the 1990s, the ESA has developed 32-bit processors, including ERC32 and TSC695[66] as well as 64-bit processors, such as GR712RC and GR740, forming the Scalable Processor Architecture (SPARC) series of space-grade processors. The latter are widely used in space missions. GR712RC[67] uses a dual-core LEON3-FT processor at 100 MHz exhibiting a computing power of 200 MIPS, while GR740[68] integrates four LEON4 processors at 250 MHz reaching a computing power of almost 1700 DMPS. NASA and ESA studied next-generation multicore space-grade processors to meet the high-performance computing requirements for different space applications. Since 2015, the Advanced RISC Machine (ARM) architecture processor has been the main focus for low-power development. In 2016, NASA initiated studies on high-performance spaceflight computing (HPSC) using the ARM architecture. The HPSC processor[69] consists of eight radiation-hardened ARM Cortex A53 processors. In 2017, ESA launched the DAHLIA[70] program which is based on the ARM architecture. The latter is made of four radiation-hardened ARM Cortex-R52s, having a computing performance of almost 4 000 DMIPS. In 2021, ESA conducted a study on a space-grade processor based on the open RISC-V architecture, which is referred to as GR7xV.

NASA proposed a high-performance reconfigurable hybrid processor architecture based on FPGA, which is referred to as the SpaceCube[71-72]. The latter fully uses the functional advantages of different processors, such as CPU, DSP, and FPGA, and takes radiation-hardened measures for commercial processors. It also enables the high-speed interconnection through many interfaces, including PCI and SATA, significantly increasing the processing ability of scientific data through distributed computing among various heterogeneous resources. The SpaceCube architecture has been used in several spacecrafts[73-74] that adopt radiation-hardened HPSC chips. The second-generation Spaceborne Computer-2 (SBC-2)[75] was developed by Microsoft, HP, and NASA. It was launched to the International Space Station (ISS) in February 2021. At present, it is considered as the most powerful high-performance computing platform in space, and it can handle the real-time processing of on-orbit experimental data as well as space artificial intelligence. Furthermore, new computing technologies, such as brain-inspired computing[76] and quantum computing[77] should be considered in the future use of on-board intelligent computing.

BM3803 is a commonly used space-grade processor for spacecrafts in China. It has a main frequency of 100 MHz and an integer computing capability of 86 MIPS[78]. However, it has a low performance. The BM3823[79] space-grade processor is widely used and has made some progress in the field. It has a main frequency of 300 MHz and a floating-point computing capacity of 69 MFLOPS. BM3883MARH[80] is the most recent SPARC architecture octa-core radiation-hardened processor. It has a main frequency of 1 GHz, fixed-point and floating-point computing powers of 16 GIPS and 32GFlops, respectively. It can fulfill the computing needs of different tasks in the future. In terms of ARM architecture, the Yulong 810A chip[81] features a 4-core ARM A9 main processor, a co-processor with a Graphic Processing Unit (GPU), a Neural Network Accelerator engine (NNA) unit, a fixed-point processing power of 12 Tops, and a floating-point processing capacity of almost 64 GFlops. In conclusion, the processing capacity of space-grade processors in China is gradually increasing. In the future, they will be able to process a wider range of space applications.

Future onboard computing technology will mostly focus on moving from single-core to multi-core processors. On

the one hand, processor architectures, such as SpaceCube, will play a crucial role in meeting the high-performance application requirements of the upcoming scientific exploration missions for task planning, image compression, and processing. In addition, the onboard computer can further improve the functional density and increase the computing ability of avionics systems by coordinating the distribution computing ability of different heterogeneous computing resources. On the other hand, due to their low cost and high performance, the COTS products will become increasingly popular in space applications. It is expected to use high-performance COTS products for non-critical functions and space-grade chips for crucial functions, allowing to reach on-board high-performance computing of spacecrafts.

3.4. Autonomous operation technology

The autonomous operation technology of spacecrafts does not rely (or slightly rely) on external intervention, and it performs long-term, safe, and autonomous operation by sensing its own state and the external environment. It is able to autonomously schedule tasks, execute commands, monitor states, and reconfigure faults[82]. The autonomous operation of spacecraft includes the autonomous survival management, autonomous mission management, autonomous health management, and autonomous scientific exploration, as shown in Fig. 13.[83]

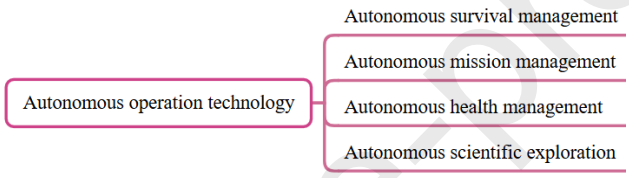

Fig. 13 Spacecraft autonomous operation technology.[83]

(1) Autonomous survival management: The spacecraft will be designed with the basic ability to maintain the regular operations of the platform by developing autonomous management systems for many functions, including energy, communication, attitude, and temperature control. Examples for ensuring high safety of the spacecraft platform include its necessity to have an autonomous energy management mode that allows it to automatically reduce the load power in the case of insufficient energy outside the TT&C area. The SMART-1 lunar probe, launched by ESA in 2003, should be able to automatically reconfigure itself in the event of a hardware failure, continuously operate for 10 days without ground assistance, and survive a two-month period when ground contacts are interrupted and the satellite is in safe mode.

(2) Autonomous mission management: The spacecraft performs mission planning and automatically conducts important flight events based on mission objectives. For the first time, the Deep Space-1(DS-1) spacecraft[84-85] was able to perform autonomous mission management, mission planning, autonomous execution, and spacecraft status monitoring using the Remote Agent software system. The “new millennium” plan of NASA also considers the autonomous technology as a key development direction.

(3) Autonomous health management: In case of failure, the spacecraft detects its health state and performs autonomous disposal and recovery functions. The F-35[86] aircraft, which was jointly developed by the United States and several other countries, is the most successful application of health management technology in use today. NASA designed the Livingstone system based on the transfer system model, they applied it to many spacecrafts, such as DS-1, EO-1, X-34, and X-37, yielding satisfactory results. More precisely, it was able to efficiently and stably perform fault detection and diagnosis with minimal human assistance. ESA also summarized the hierarchical Failure Detection, Isolation and Recovery (FDIR) technology in several related projects. This technology has been used on spacecrafts, such as the Smart-1 probe[87] and Spacebus 4000, enabling the autonomous on-orbit fault detection and reconstruction.

(4) Autonomous scientific exploration: Future space missions will emphasize the extent to which scientific

Journal Pre-proofs

objectives are met, and spacecrafts will conduct scientific exploration with greater autonomy while returning collected scientific data to the Earth, which will be analyzed by scientists. To increase the scientific return of the mission, future autonomous scientific exploration technologies will focus on science-oriented autonomous functions, such as processing scientific data, discovering scientific phenomena on orbit, and autonomously detecting unexpected scientific events[88-91]. Many studies are being conducted on new intelligent autonomous scientific exploration approaches, including deep learning techniques based on FPGA.

The Beijing Institute of Control Engineering as well as other research institutes and universities conducted studies on autonomous mission planning and autonomous health management[92-93]. Studies on autonomous mission planning and autonomous health management technology, have also been conducted for new remote sensing satellites and many other missions. Some of the technologies started to be implemented on orbit.

The future development trend of the autonomous operation technology for spacecrafts mainly comprises the following aspects: (A) As exploration objectives become more various and complex, the main trend of the autonomous operation technology is the transition from ground support to on-orbit autonomy, with an increasing demand for system-level autonomous operation. (B) The future autonomous operation technology will gradually shift from autonomous task management to autonomous scientific exploration, while emphasizing the extent to which scientific aims are met in exploration tasks. (C) New technologies, such as machine learning, will become crucial in strengthening the spacecraft autonomy, demonstrating promising applications in autonomous mission planning and autonomous health management.

3.5. Software-defined technology

The software-defined technology[94-95] decouples hardware and software through advanced corresponding architectural design, and unifies the management and scheduling of the hardware by a software. The software-defined technology uses a software to control and manage hardware resources while also empowering hardware. This results in significantly increasing the flexibility, efficiency, and adaptability of the system. In the spacecraft field, the software-defined technology can be divided into software-defined load, Software-Defined Network (SDN), and software-defined satellite.

(1) Software-defined payload: In 2012, the NASA's Space Communications and Navigation (SCaN) test platform project developed Software-Defined Radio (SDR) payloads and integrated radar imaging with communication by implementing SDR-based architecture for communication, navigation, and network software applications on the International Space Station. Eutelsat-Quantum[96-97] is the world's first software-defined commercial communication satellite. It was developed in Europe in 2015. It uses the SDR technology to increase its communication ability in the full Ku-band. It could be reconfigured on-orbit in terms of many parameters, such as communication coverage, frequency, bandwidth, and power. The Space Inspire satellite[98] of Thales Alenia space uses the software-defined payload technology to seamlessly transition between satellite video broadcasting and broadband connectivity services as required.

(2) Software-defined networking: It is a new network architecture based on the OpenFlow[99] technology. In contrast to traditional networks, which have tightly coupled control and data plane architectures, the SDN technology[100] isolates the complex message forwarding control logic from the routing device, and adopts a specific software to perform hardware forwarding control of data. Software-defined satellite networks use the SDN technology to separate the data from the control plane in satellite networks, so that the satellite should only perform basic forwarding and hardware configuration functions, while the ground control center handles other tasks, such as routing calculations and resource management.

(3) Software-defined satellite: In the Blackjack program, each node satellite is software-defined, and PitBoss[101], which serves as the on-board control unit exhibiting efficient reconfigurable processing of payloads, is considered as a comprehensive application of software-defined payloads and software-defined satellites. The SmartSat of Loma is

another typical example of software-defined satellites. Similar to a smartphone, it allows the users to modify and add new applications following their needs. GSky-1 is a software-defined satellite owned by Vector Space (an American small solid rocket company), which incorporates a cloud-based intelligence layer[102] based on its software-defined satellite technology, referred to as GalacticSky TM.

In terms of software-defined technology in China, the "software-defined satellite"[103] uses the software radio technology to perform on-orbit functional reconfiguration of satellite payloads through software upgrades. In order to support the unified deployment various application software in the micro-cloud computing platform, the "Tianzhi" satellite[104] adopts an open system architecture composed of intelligent computing engines, switches, and intelligent components, as shown in Fig. 14[105]. The program can be downloaded and updated at any time, and various customized services are available. Thus, progress has been made in many aspects, including space supercomputing platforms, onboard operating environments, and software-defined satellites. Xing et al.[106] proposed a software-defined spacecraft system architecture, in which various devices at the equipment layer can be connected to the system through reconfigurable interface units to achieve plug-and-play.

Software-defined payloads perform functional reconfiguration of payloads on a shared hardware platform using software-defined[107] systems. At present, the latter is mostly based on communication payloads, and it relies on the development of software-defined radios. In the future, software and algorithms will play a crucial role in increasing the capacity and performance of payloads, and a gradual trend toward interface standardization, hardware configuration minimization, and software function maximization is expected. The software-defined satellite and software-defined network technology has more slowly developed compared with the software-defined payload technology. The software-defined satellite technology reconfigures on-orbit functions to be able to perform various functions while increasing the overall satellite efficiency. However, this increases the cost and complexity of the satellites. The software-defined network technology has not been used in space yet. However, it is expected to become an essential factor in the interconnection of future spacecrafts due to its ongoing development and widespread ground-based applications.

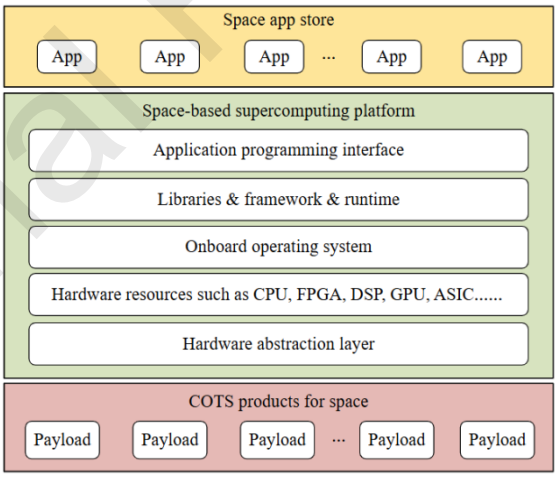

Fig. 14 Software-defined satellite system architecture.[105]

4. Roadmap of spacecraft avionics technology

Based on the previously mentioned analysis of the research status of spacecraft avionics systems and related key technologies, and taking into account the maturity and mission requirements, a roadmap for the development of the spacecraft avionics technology was developed in two stages: 2025-2030 and 2030-2035. The details of this roadmap are illustrated in Fig. 15. In terms of system architecture, the first stage develops a distributed integrated modular

Journal Pre-proofs

system architecture characterized by functional integration and physical distribution, while the second stage adopts a general open system architecture, which is characterized by on-demand service and random access. In terms of network interconnection technology, the first stage is based on the coexistence of the IP, CCSDS, and DTN protocols to enable the interconnection of spatially heterogeneous networks, while the second stage relies on the convergence of the IP, CCSDS, and DTN protocols to enable the interconnection of networks across planetary domains. In addition, in terms of high-speed bus technology, the first stage combines SpaceWire, Ethernet, and TTE buses to establish a satellite network, while the second stage uses TTE and TSN buses. Moreover, in terms of the onboarding computing technology, the first stage consists of a hybrid heterogeneous computing strategy based on multi-core processors, while the second stage uses commercial servers and many-core processors to establish brain-inspired computing and space supercomputing. As for the autonomous operation technology, the first stage enables the autonomous survival management, autonomous mission management, and autonomous health management of the spacecrafts, while the second stage provides autonomous scientific exploration and on-orbit autonomous decision-making of spacecraft. Moreover, in terms of the software-defined technology, the first stage allows to use the software-defined payload and software-defined network technology, while the second stage enables the use of the software-defined spacecraft technology and also yields the real on-orbit functional reconfiguration of the spacecraft.

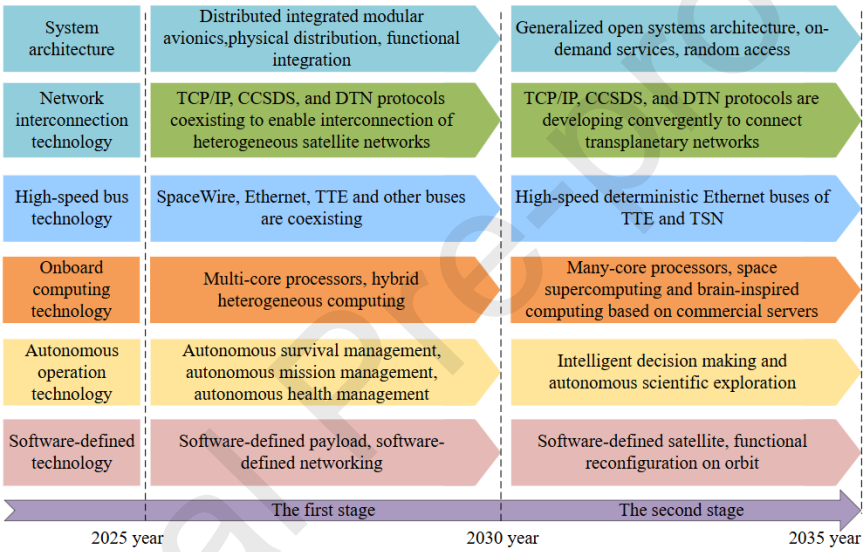

Fig. 15 Roadmap of the spacecraft avionics technology.

5. Intelligent avionics system architecture

5.1 Concept of intelligent avionics system

Based on the above-mentioned spacecraft avionics system architecture, as well as the development status, key technologies, and development trends of typical spacecraft avionics systems, this paper proposes the concept of an intelligent avionics system for future spacecraft applications, as shown in Fig. 16. The system will take the intelligent supercomputing platform as the core, and through the ground cloud support system and the edge intelligent spacecraft, it will build an intelligent spacecraft information system integrated with the satellite and the ground, with the capabilities of open and sharing, cloud-edge collaboration, fusion decision based on inference and rules, intelligent autonomous operation, and functional reconstruction. The ground cloud support system includes laser stations, microwave stations, distributed data centers, operation management centers, ground cloud centers, etc. The edge intelligent spacecraft is a constellation system composed of relay satellites and spacecraft. Key features are described as follows:

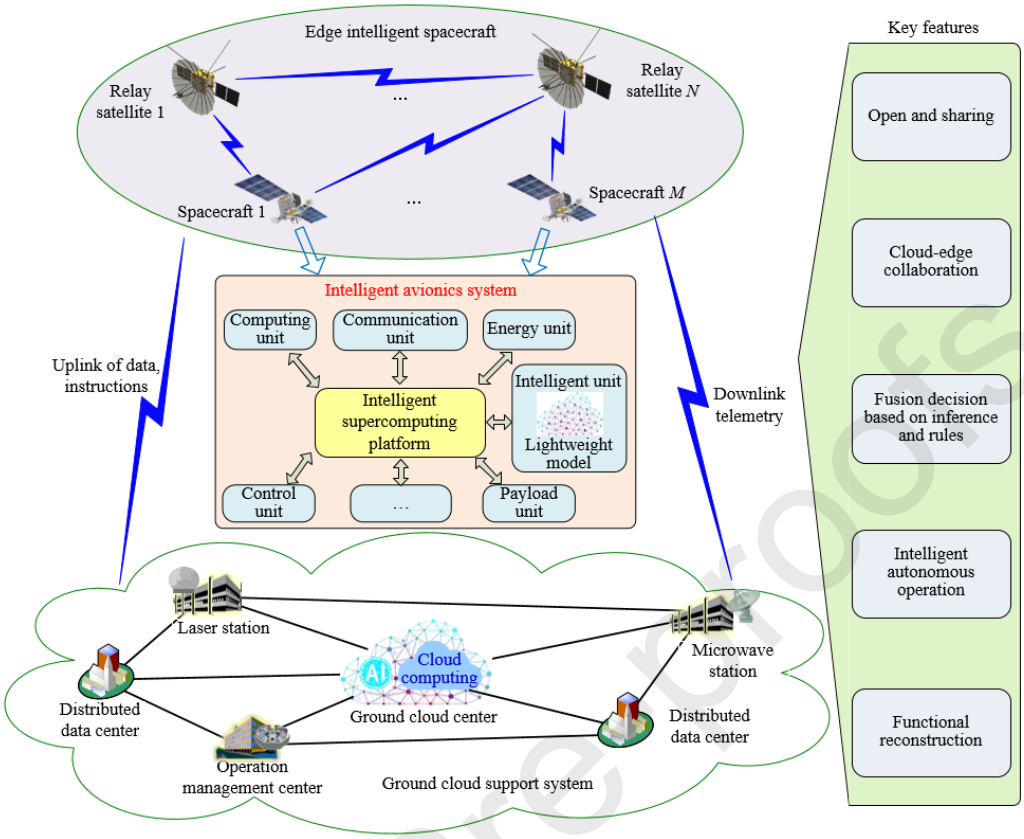

Fig. 16 Concept of intelligent avionics system.

(1) Open and sharing: Using the principles of hardware modularization and software componentization, an open and shared intelligent avionics system with a uniform standard is created. The system includes several devices, such as computing unit, communication unit, energy unit, intelligent unit, control unit, load unit, and so on. These devices are realized by standardized hardware modules and software components through shelf-type assembling, with the feature of physical distribution and functional integration. These devices are connected by high-speed Ethernet, which can realize plug-and-play and flexible access of different devices. Cross-node mutual control between spacecraft is possible thanks to the high level of standardization in hardware and software architecture. For example, ground workers can remotely manage the lunar robot across many spacecraft by specifying simply the control object, while the spacecraft handle the routing and data transfer autonomously.

(2) Cloud-edge collaboration: By collaborating between the powerful inference capability of the large model on the ground cloud support system and the edge intelligent spacecraft, the problem of limited on-orbit computing resources of spacecraft under complex application scenarios is solved. Firstly, the complex tasks are decomposed according to the application scenarios, and the tasks with high real-time and environment-related requirements are handed over to the spacecraft for on-orbit processing, while the complex analysis tasks are turned over to the large ground model for processing. Secondly, the spacecraft collects real-time data, sends the results processed by the on-orbit lightweight model to the large ground model, which uses its own massive data and the received results to continuously conduct model training and inference analysis, and then sends the analysis results to the spacecraft, realizing the cloud-edge cooperative interaction of the spacecraft data. Finally, the large ground model can update and optimize the lightweight model in the spacecraft intelligent unit based on the spacecraft's on-orbit operation state, improving the accuracy of its on-orbit inference.

(3) Fusion decision based on inference and rules: The spacecraft employs the model inference method of on-orbit lightweight model and large ground model collaboration, together with traditional rules, to make intelligent decisions

Journal Pre-proofs

on complicated tasks. The large ground model has powerful model training, general inference, and knowledge updating capabilities, and after pruning and distilling the key inference logic and knowledge of the large model, the on-orbit lightweight model is generated and deployed on the spacecraft's intelligent unit so that the model can run on the resource-constrained intelligent unit. The lightweight model processes on-orbit data in real time and autonomously performs tasks such as spacecraft health management. At the same time, it sets clear rules for the spacecraft's safety-critical systems and adopts an inference mechanism that integrates model inference methods and traditional rules when making decisions to ensure the safe and stable operation of the spacecraft. For example, if the model detects a fault in the computing unit, the spacecraft would autonomously switch the computing unit from the main module to the backup module or migrate the task to other units according to the rules.

(4) Intelligent autonomous operation: In terms of autonomous survival management, machine learning algorithms are used to conduct real-time monitoring of key survival parameters such as energy and temperature of spacecraft, autonomously adjusting energy and thermal resources to a balanced state to ensure spacecraft safety. In terms of autonomous mission management, deep learning algorithms are adopted to identify mission scenarios, and when combined with rules, mission planning and resource allocation strategies are autonomously generated to improve mission execution efficiency. In terms of autonomous health management, on-orbit lightweight models are used to monitor the spacecraft's operating status in real time, warn of probable malfunctions, and take countermeasures autonomously. In terms of autonomous scientific exploration, algorithms such as machine vision and deep learning are used to analyze exploration data, discover interesting scientific phenomena, and autonomously adjust exploration strategies. When necessary, reasoning support is requested from large ground models to achieve efficient study of scientific targets.

(5) Functional reconfiguration: Through the integration and application of software definition, resource virtualization, dynamic function loading, and other technologies, the spacecraft's on-orbit mission migration, intelligent resource management, and function reconfiguration are realized. Specifically, software-defined technology abstracts and virtualizes hardware resources into a unified resource pool, resulting in the decoupling of hardware and software, allowing hardware resources to be controlled and managed as if they were software. Resource virtualization technology divides physical resources into several independent virtual resource units, which facilitates efficient utilization and isolation of resources and provides a foundation for task migration and function reconfiguration. Dynamic function loading technology enables on-orbit real-time loading and unloading of functional modules, allowing the spacecraft to update and reconstruct its functions in real time as mission changes occur.

5.2 Architecture of intelligent avionics system

The architecture of an intelligent avionics system for spacecraft is shown in Fig. 17, in which the standardized hardware modules are assembled on demand to form functional units, the general software components are assembled on demand to form software, and the communication protocols follow the unified standard so that the hardware and software can be assembled on demand, the devices can be plug-and-play, the software can be upgraded, and the functions can be reconfigured on-orbit. The hardware module is mainly divided into three types: computing and storage, network interconnection, and input/output interface, and these modules interact with each other through the backplane interface within the unit.

Journal Pre-proofs

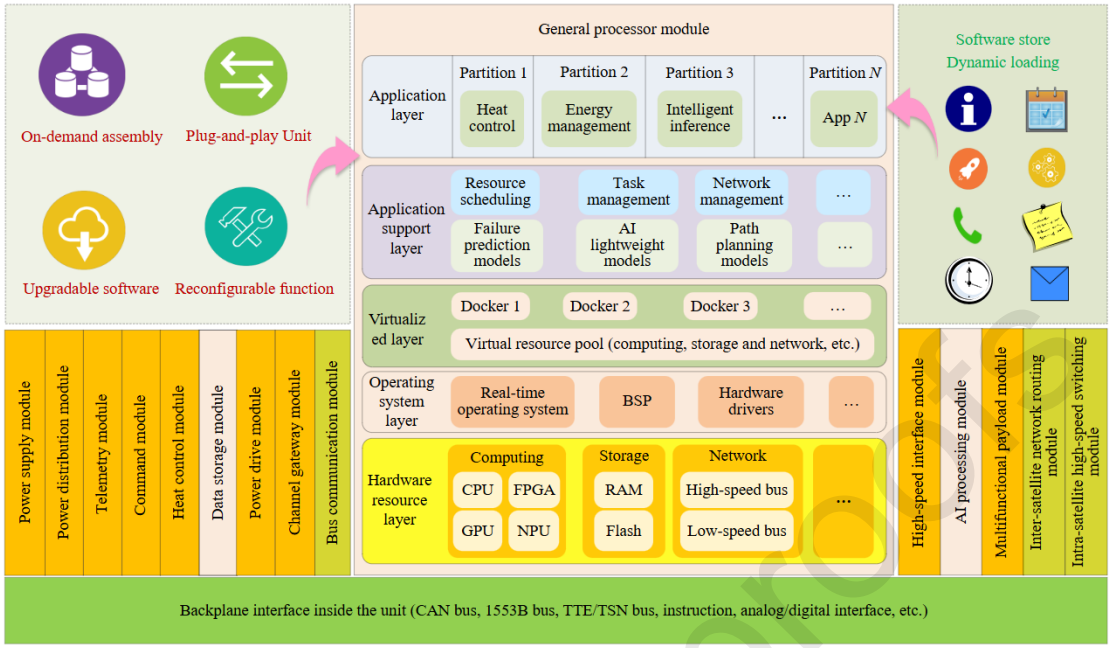

Fig. 17 Architecture of intelligent avionics system.

(1) The computing and storage type comprises general processor modules, data storage modules, AI processing modules, and so on, which enable task management, data storage, and intelligent computing capabilities.

(2) The network interconnection type includes bus communication modules, intra-satellite high-speed switching modules, inter-satellite network routing modules, and so on, which enable intra- satellite and inter-satellite information interaction.

(3) The input/output interface type includes power supply module, power distribution module, telemetry module, command module, heat control module, channel gateway module, power drive module, high-speed interface module, and multifunctional payload module. Among them, the channel gateway module realizes low-speed/high-speed communication with other spacecrafts. The high-speed interface module transmits data at high speeds by TTE or TSN bus, while the multipurpose load module configures a wide range of loads through hardware sharing and software defining.

Among them, the general processor module runs on avionics system software, which is designed using layering and componentization principles and is divided into five layers: the hardware resource layer, the operating system layer, the virtualized layer[108-109], the application support layer, and the application layer. The main functions of each layer are described as follows:

(1) Hardware resource layer: It is the operating entity of system functions and services, including a variety of hardware resources such as computing, storage and network. Specifically, computing resources are made up of high-performance heterogeneous computing units like CPU, FPGA, GPU, NPU, and so on.

(2) Operating system layer: It includes real-time operating system, BSP (board-level support package) and hardware drivers, etc., and it supports the kernel, system libraries, and tool chain. Different standardized operating systems can be selected for various hardware resources.

(3) Virtualized layer: It provides abstracted software interfaces to various hardware resources to form a unified virtual resource pool, breaks physical resource isolation by partitioning and combining virtual resources, and provides interfaces such as task scheduling and resource management for the application support layer to improve resource management flexibility.

(4) Application support layer: It mainly deploys software components such as resource scheduling, task management, network management, security management, and other software components, as well as intelligent algorithm libraries such as failure prediction models, AI lightweight models, path planning models, etc., providing a large number of generalized services to the application layer and supporting the scheduling of virtualized resources.

(5) Application Layer: It runs a variety of partitioned applications, such as heat management, energy management, task planning, data management, intelligent inference, and so on, and allows for rapid deployment and dynamic loading of third-party software store applications.

6. Application scenario

The Moon and cislunar space became popular destinations for deep space exploration[110-111]. Many countries, including the US and Japan, proposed plans for lunar communication and navigation. The former is also promoting the establishment of LunarNet[112] through the Artemis program, and ESA released the Moonlight program[113-114], while expecting to develop a sustainable lunar communication and navigation system by 2027. The Japan Aerospace Exploration Agency (JAXA) proposed a lunar navigation satellite system for the lunar south pole mission. Qiao et al.[115] proposed the concept of cislunar space cloud network by establishing a cross-domain integrated cislunar space network. Fig. 18 shows a schematic diagram of another cislunar space network that includes the Earth, Moon, and cislunar space domains. Together with other satellites, the backbone network of satellites in the Earth GEO orbit, the cislunar space Lagrange point, and the circumlunar orbit form the generalized cislunar space network, which provides many crucial functions, such as location navigation, data communication, and information services to cislunar space users. Key avionics technologies can be applied in the cislunar space network system.

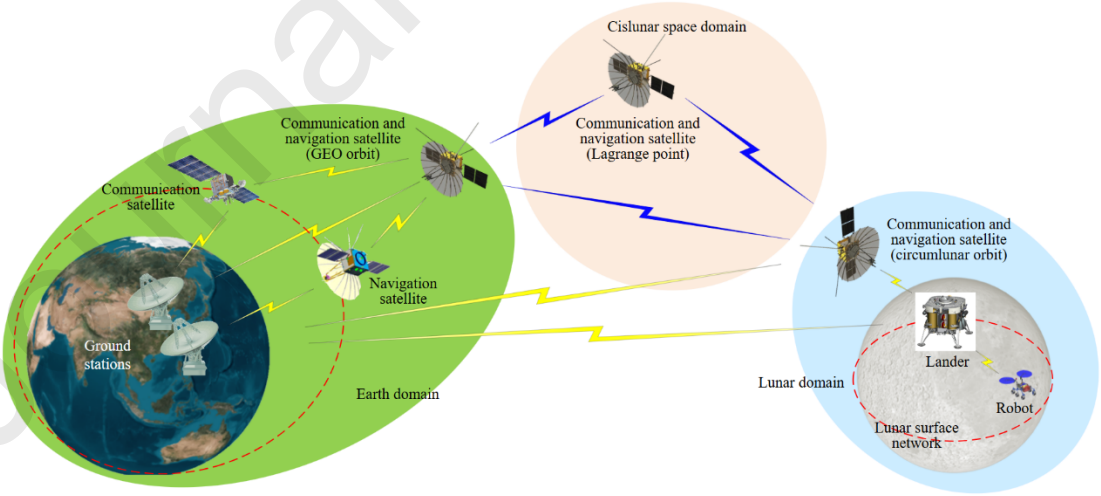

Fig. 18 Schematic diagram of cislunar space network.

(1) Data communication: Telemetry data should be shared and delivered inside the spacecraft and between spacecrafts. There are different types of data, such as state telemetry, control instructions, and other low-speed data that require low latency and high reliability, as well as video, test data, and other large-volume data that do not require high real-time performance. The avionics system performs the mixed transmission of heterogeneous data within the

spacecraft through high-speed buses, designs suitable network protocols using the network interconnection technology, and then performs the interconnection of spacecrafts in different network domains through spacecraft and spacecraft-terrestrial microwave or laser links, enabling the information sharing between cross-domain spacecrafts.

(2) Location navigation: The location navigation functions in cislunar space are divided into three regions: the Earth region, the Moon region, and cislunar space[116]. The services in the Earth region are advanced, and those in the lunar region can be accomplished by referring to the Earth region model and establishing circumlunar navigation constellations. This can be done by the users of the cislunar space by conducting spacecraft measurements and adopting external high-precision observation techniques. Future studies should emphasize cislunar cooperative Positioning, Navigating, and Timing (PNT) design, multi-source fusion autonomous navigation, and software-defined technologies. The latter are made possible through avionics technologies, such as deep-space network interconnection, high-performance onboard computing, software-defined payloads, and satellite autonomous operation.

(3) Information service: This function mainly includes space situational awareness, space environment monitoring, and scientific exploration. In order to perform space situational awareness and environment monitoring, mixed heterogeneous resources are adopted to conduct high-performance onboard computing in the design of satellite avionics for the cislunar space network system. This system consists of a deep-space information infrastructure, which should be able to perform various autonomous operations, including survival management, mission management, health management, and scientific exploration. By relying on software-defined payload, software-defined network, and software-defined satellite technologies, the service capacity of the payloads can be enriched. In addition, on-orbit reconfiguration of payload functions can be performed by equipping it with various payloads.

7. Challenges and development suggestions

7.1. Challenges

The existing spacecraft avionics system cannot fulfill the networked, intelligent, and autonomous requirements of future missions. Its application is restricted by many challenges, such as the inconsistent system architecture[117-118], difficult interconnection, insufficient on-orbit computing, and low intelligence.

(1) Inconsistent system architecture

At present, spacecraft avionics systems are designed independently from their own requirements due to the lack of uniform standards. This leads to various avionics system architectures, weak expandability, less functional integration between subsystems, and difficulties in implementing software componentization and hardware modularization in spacecraft design. Due to the rocket capacity and platform resource constraints, deep space exploration missions require lightweight and compact avionics systems. Therefore, integrated consideration should be taken at the hardware, software, and protocol levels in order to establish a generalized, open, flexible, and scalable architecture for an intelligent avionics system. This could drastically solve the problem of tightly coupled hardware and software.

(2) Difficult interconnection

The spacecraft should have interconnection networking abilities, and it should be supported by the space-ground integrated network communication protocol in order to facilitate the real-time information transmission and collaborative work with other spacecrafts. At present, the main problems can be summarized as follows: lack of uniformity protocols, tight coupling of software and hardware, complexity and wide range of network interconnections, numerous intra-, inter-, and terrestrial interfaces, independent design of different spacecraft network protocols, and difficulty in supporting future functions (e.g., cooperative operation and flexible multi-spacecraft networking). This

Journal Pre-proofs

yields a significant challenge, which consists of ensuring that every spacecraft and subsystem conducts product in accordance with standardized interfaces and protocols.

(3) Insufficient on-orbit computing

The ability of the spacecraft to autonomously execute algorithms, such as mission planning and network management, is a new challenge faced by the processing capacity of the onboard computing platforms. This could be intensified with the future application scenario of large volumes of data and high algorithmic complexity in on-orbit information processing. The computing and storage ability of the existing spacecrafts is far from meeting the demand on orbit, and the dispersion of the underlying computing resources makes the support of many functional requirements (e.g., intelligence and autonomous management) more difficult. Studies on the high-performance onboard computing technology are required to enhance the on-orbit computing and increase the information processing capacity of the spacecraft.

(4) Low intelligence

At present, the spacecraft operation highly depends on ground intervention. The support for on-orbit information services and autonomous decision-making capacity is still very limited. In addition, the level of intelligence and autonomy is moderate, and most of them are still ground-based. Because of these factors, the demand for highly-reliable long-term autonomous operation of spacecrafts cannot be met. Therefore, it is crucial to break through the on-orbit autonomous management technology of spacecrafts and increase the intelligence level for autonomous decision-making and autonomous health management.

In summary, the development of avionics systems for spacecrafts should overcome many challenges, including inconsistent system architecture, difficult interconnection, insufficient on-orbit computing, and low intelligence level.

7.2. Development suggestions

The following development suggestions are provided to solve the aforementioned problems:

(1) Promoting the application of intelligent avionics system architecture

By referring to important space electronic system architectures, such as SAVOIR and DIMA, this paper proposes a generalized open intelligent avionics system architecture for spacecraft, the application of which should be accelerated. The architecture realizes the resource distribution and function synthesis of the avionics system. The system design follows a uniform specification, and modules having the same function can be compatible with and replace one another. Many technologies, including the Micro Electro-mechanical System (MEMS) and System in Package (SIP), led to advancements in the standardization of spacecraft modules, portable compactness design, high functional integration, and rapid assembly. This allowed to further reduce the cost of the spacecraft and solve problems of tightly coupled software and hardware, as well as difficult interconnection, gradually developing an intelligent avionics system that can quickly respond to the needs of the users.

(2) Building an integrated cross-domain interconnection network on a wide spatial and temporal scale

Spacecraft networks that rely on the ground for operation and are disconnected from one another can no longer match the users' demands for real-time and comprehensive services. On the one hand, the future spacecraft network

Journal Pre-proofs

will have a higher-speed network bus, allowing to satisfy the large-capacity and high-real-time data transmission needs of underlying missions. On the other hand, the development of a distributed and cooperative constellation system is crucial in the fields of navigation, communications, and remote sensing. It is expected that the future spacecraft networks will perform the interconnection of resources in the air, sky, earth, sea, and even deep space. They will perform interoperability and resource sharing between many nodes, applications, and users in the cross-domain heterogeneous network. In addition, they will provide users with personalized subscriptions of efficient services through effective acquisition, coordination, transmission, and integration of multidimensional information.

(3) Enhancing the on-orbit computing and increasing the information processing ability of the spacecraft

With the rapid growth in demand for various applications and functions, spacecrafts should perform various tasks, such as mission planning, image processing, health management, and multi-satellite collaboration. At present, the processing capacity of the spacecraft on-board computers is significantly affected by the need for processing and storing massive heterogeneous telemetry data. To solve the problems of massive data and resource limitation in on-orbit information processing, the key technologies of on-orbit intelligent information processing, high-performance distributed computing, and large-capacity storage should be applied and improved. To enhance the on-orbit information processing and increase the computing capacity of the aircraft for future complex missions, a high-performance on-board information processing platform should be established using heterogeneous resources such as CPU, GPU, Digital Signal Processor (DSP), FPGA, and NPU.

(4) Emphasizing the importance of commercial off-the-shelf components in space systems

COTS products will have a wide range of applications since their processing capacity is much higher than that of conventional on-board processors. To fully use advanced technologies and volume products developed by commercial innovation and investment, high-performance COTS products in non-critical spacecraft parts should be studied and adopted. This is also an efficient means for reducing the spacecraft costs, boosting the payload ratios, ensuring the spacecraft technological progress, and improving the market competitiveness. Therefore, to increase the reliability of the component in the space environment, the use of COTS products in space still requires a systematic study on space environment tests, component screening, and fault-tolerant design. The reliability analysis, validation, and evaluation of COTS products should also be strengthened.

(5) Improving the autonomous management and increasing the intelligence level of the spacecraft

Traditional spacecraft operation and management based on ground stations face many challenges, such as excessive resource consumption and delayed fault disposal. This is mainly due to the continuously increasing number of spacecrafts and the complexity of the future operations. Due to their properties, such as long flight distances, very large communication delays, and unknown space environment, deep space probes require a high level of autonomy. Key technologies, including autonomous mission planning, autonomous health management, and on-orbit autonomous decision-making for spacecrafts, will be studied using novel technologies, such as artificial intelligence and cloud computing. This will contribute to the on-orbit autonomous management capacity of the spacecrafts, allowing them to accurately detect changes in themselves and the external environment when dealing with unexpected factors, and to autonomously complete their flight missions and remove faults.

8. Conclusions

This paper reviews the architecture of typical spacecraft avionics systems and the state of their development. In terms of architecture, spacecraft avionics systems mainly follow the development trend of combining integration and distribution, while there is a growing need for intelligent autonomous management capacities, on-orbit high-performance computing, and information processing. The key technologies involved in avionics, such as network

Journal Pre-proofs

interconnection, high-speed bus, onboard computing, autonomous operation, and software-defined technology, as well as their features and potential future development trends, are thoroughly analyzed.

Based on the drawn conclusions, an intelligent avionics system architecture for future spacecraft applications is proposed, suggestions for the development of future spacecraft avionics systems are provided. Future work will emphasize accelerating the application of intelligent avionics system architecture, establishment of an integrated cross-domain interconnection network on a large spatial-temporal scale, increase of the on-orbit computing and information processing ability, full use of COTS products in space systems, and improvement of autonomous management and intelligence of spacecrafts. The aforementioned measures will significantly improve the networked, intelligent, and autonomous level of the spacecraft avionics systems, and it will serve as a useful guide for the long-term advancement of the spacecraft avionics technology.

Acknowledgement

This study was jointly supported by the civil aerospace foreign technical cooperation project of China (No. ZB02) and the civil aerospace pre research project of China (No.D030102).

References

1. Avtin IV, Baburov VI, Ponomarenko BV, et al. *Principles of integrated airborne avionics*. Singapore: Springer aerospace technology, E-Publishing Inc.; 2021.p.1-20.

[2] Lin CW, Chen G, He SS, et al. Overview of space plug-and-play avionics interface technology. *2020 international conference on computer engineering and application (ICCEA).* Piscataway: IEEE Press; 2020.

[3] Martin M, Summers J, Lyke J. AFRL plug-and-play spacecraft avionics experiment (SAE). *2012 IEEE aerospace conference*. Piscataway: IEEE Press; 2012.

[4] Martin M, Lyke J. Modular open network ARCHitecture (MONARCH): transitioning plug-and-play to aerospace. *2013 IEEE aerospace conference*. Piscataway: IEEE Press; 2013.

[5] Mitchell C, Rexroat J, Rawashdeh SA, et al. Development of a modular command and data handling architecture for the KySat-2 CubeSat. *2014 IEEE aerospace conference*. Piscataway: IEEE Press; 2014.

6. AIAA. Space plug-and-play architecture standards development guidebook. Reston: AIAA; 2013. Report No.: AIAA G-133-1-2013.

[7] Nannipieri P, Dinelli G, Sterpaio LD, et al. *Next-generation high-speed satellite interconnect*. Cham: Springer; 2021.p.1-21.

Journal Pre-proofs

8. He XW, Li JH, Bai F, et al. Avionics system architectures for software-defined spacecraft. *Mobile wireless middleware, operating systems and applications (MOBILWARE 2022)*. Cham: Springer; 2023.p.150-151.

[9] Herpel HJ, Schuettauf A, Willich G, et al. Open modular computing platforms in space—Learning from other industrial domains. *2016 IEEE aerospace conference*. Piscataway: IEEE Press; 2016.

10. Internationaldeepspacestandards.com. International avionics system interoperability standards[Internet]. Washington, D.C.; 2019 [cited 2025 Nov 15]. Available from: https://internationaldeepspacestandards.com/wp-content/uploads/2024/02/avionics_baseline_final_3-2019.pdf.

11. NASA. An open avionics and software architecture to support future NASA exploration missions. Washington, D.C.: NASA; 2018. Report No.: JSC-E-DAA-TN56993.

[12] Green C, Haghani N, Hernandez-Pellerano A, et al. MUSTANG: A workhorse for NASA spaceflight avionics. *2023 IEEE 9th international conference on space mission challenges for information technology (SMC-IT)*. Piscataway: IEEE Press; 2023.

[13] Robati T, Gherbi A, Mullins J. A modeling and verification approach to the design of distributed IMA architectures using TTEthernet. *Procedia Comput Sci* 2016; **83**:229–36.

[14] Wang HC, Niu WS. A review on key technologies of the distributed integrated modular avionics system. *Int J Wirel Inf Netw* 2018;**25**(3):358–69.

[15] Zhou X, Xiong HG, He F. Hybrid partition- and network-level scheduling design for distributed integrated modular avionics systems. *Chin J Aeronaut* 2020;**33**(1):308–23.

16. Liu S, Wang HM. Overall design technology of integrated electronic system configuration for next generation satellites. *Space Electronic Technology* 2015;**12**(6):90-4[Chinese].

17. Liu WW, Cheng BW, Wang LY, et al. Design of distributed spacecraft avionics system. *Spacecraft Engineering* 2016(6):86-93[Chinese].

[18] Jiang LX, Wang L, Li MX, et al. Design of onboard avionics based on commercial off-the-shelf parts for TianQi-2 nanosatellite. *J Spacecr Rockets* 2024;**61**(4):1114–23.

[19] Chen CJ, Yin YB, Yang J, et al. Discussion on the design of low-cost spacecraft avionics based on COTS technology. *2024 7th international conference on electronics technology (ICET)*. Piscataway: IEEE Press; 2024.

20. He XW, Li N, Xu Y, et al. Requirements system analysis of intelligent spacecraft avionics and discussion of its architecture. *Spacecraft Engineering* 2018;**27**(4):82-89[Chinese].

21. Liu WW, Yu JH, Mu Q, et al. Design and implementation of an open modular onboard avionics system. *Journal of Telemetry, Tracking and Command* 2023;**44**(3):53-60[Chinese].

Journal Pre-proofs

22. Liu Y, Yan ZW, Jia YC, et al. Design of manned lunar spacecraft avionics system structure. *Journal of Astronautics* 2024;**45**(2):314-324[Chinese].

23. Gao JX, Xu ZP, Ding WH, et al. Autonomous control architecture of satellite intelligent computing platform. *Space-Integrated-Ground Information Net-works* 2024;**5**(4):85-94[Chinese].

24. Taylor C, Konig H, Schlossstein U. Standard payload computer for the international space station. *ESA bulletin-european space agency* 1998;**93**: 10-18.

[25] Fletcher DP, Alena R. A scalable, out-of-band diagnostics architecture for international space station systems support.*2003 IEEE aerospace conference proceedings*. Piscataway: IEEE Press; 2003.

26. DARPA. Blackjack pit boss broad agency announcement. Arlington: DARPA tactical technology office; 2019. ReportNo.:HR001119S0012.

27. Eoportal.org. Blackjack program of DARPA (Defence Advanced Research Projects Agency)[Internet]. [cited 2025 Nov 15].Available from: https://www.eoportal.org/ftp/satellite-missions/b/Blackjack_010222/Blackjack.html.

28. Krebs, G. D. Lockheed Martin: A2100/LM-2100[Internet]. [cited 2025 Oct 10]. Available from: https://space.

skyrocket.de/doc_sat/lockheed_a2100.htm.

29. Pablo R. Satellite projects in ESA ARTES programmer. *Proceedings of the space congress proceedings*. Paris: ESA; 2016.p.1-13.

[30] Liddle J, Edge L, Tondryk W, et al. GIOVE-A and GMP: SSTL's MEO and GEO satellite family-first in-orbit test results. *24th AIAA international communications satellite systems conference.* Reston: AIAA; 2006.

[31] Giorgi G, Kroese B, Michalak G. Future GNSS constellations with optical inter-satellite links. Preliminary space segment analyses. *2019 IEEE aerospace conference.* Piscataway: IEEE Press; 2019.

[32] Timmons K, Coderre K, Pratt WD, et al. The orion spacecraft as a key element in a deep space gateway. *2018 IEEE aerospace conference*. Piscataway: IEEE Press; 2018.

[33] Baggerman C, McCabe M, Verma D. Avionics system architecture for the NASA orion vehicle. *SAE technical paper series.* SAE Internationa; 2009.

34. Zhou ZS, Parker A, Brindle L, et al. Initial NovaSAR-1 data processing and imagery evaluation. *IGARSS 2020-2020 IEEE international geoscience and remote sensing symposium*. Piscataway: IEEE Press; 2020.

[35] Guo ZW, Zhang X, Gao YC, et al. Design of information management system for large modular manned spacecraft. *2021 IEEE 16th conference on industrial electronics and applications (ICIEA).* Piscataway: IEEE

Journal Pre-proofs

Press; 2021.

36. Yang F, Liu SY, Zao J, et al. Technology prospective of intelligent remote sensing satellite. *Spacecraft Engineering* 2017; **26**(5):74-5[Chinese].

37. Lei Y, Wang WP, Zhang HY, et al. Information system design of ZY-1-02D satellite. *Spacecraft Engineering* 2020; **29**(6):35-42[Chinese].

38. Lei Y, Tian HX, Yu LJ, et al. Research on the development and convergence of remote sensing satellite information system and space information network. *Proceedings of the 8th annual conference on high resolution earth observation*. 2022.

39. Wei Q, Liao Y, Shi M, et al. APSTAR-6D communication satellite system design and technology. *Spacecraft Engineering* 2022;**31**(1):10-17[Chinese].

40. Li F. China's new generation of large geosynchronous orbit satellite public platform-DFH-5 satellite platform. *Space International* 2020;**4**:27-31[Chinese].

41. Song MM, Yang DZ, Shi HR, et al. STARNet: A deep-learning algorithm for surface shortwave radiation retrieval from fengyun-4A. *Geophysical Research Letters* 2025; **52**(13): e2025GL116237.

[42] Yu YL, Jiang H, Cai JJ, et al. Analyses of Qianfan constellation coverage with respect to the ground users as of May 23, 2025. *J Phys Conf Ser* 2025; **3073**(1):012006

[43] Yang YX, Gao WG, Guo SR, et al. Introduction to BeiDou-3 navigation satellite system. *Navigation* 2019;**66**(1):7–18.

44. Jia WS, Zeng LL, Li LM, et al. Design of Beidou-3 satellite avionics system. *Astronautical Systems Engineering Technology* 2020;**4**(6):50-55[Chinese].

[45] Gong JG, Yu ZH, Wei R, et al. Design and realization of the integrated electronic system for the Chang'E-3 lunar rover. *Sci Sin-Tech* 2014;**44**(5):450-60.

46. Ye ZL, Gu M, Zhang CT. Design and verification of data management system of Chang'e-4 lander. *Spacecraft Engineering* 2019; **28**(4):94-100[Chinese].

47. Wang LS, Yang M, Tu ZJ, et al. Design of integrated electronic system architecture for Chang'e-5 orbiter. *Aerospace ShangHai* 2022;**39**(S1):10-14[Chinese].

48. Jia Y, Tian H, Zhang TY. The autonomous function design of "Zhu rong" rover. *Aerospace China* 2021(6):19-24[Chinese].

49. Bai ZG. Development achievements and prospects of China modern small satellite. *Spacecraft Engineering* 2019;

28(2):1-8[Chinese].

[50] Tian SH, Li C, Zhao L, et al. Information processing technology of housekeeping subsystem for BJ-3A/B satellites. *Spacecr Eng* 2023;**32**(3):85-92 [Chinese].

51. Li ZG, Li JY, Li C, et al. Review and prospect of small satellite onboard housekeeping system. *Spacecraft Engineering* 2021;**30**(6):128-133[Chinese].

52. Chen ZS. Development analysis and technical prospect of space-based cross-domain intelligent swarm. *Aerospace Electronic Warfare* 2022; **38**(1):1-5[Chinese].

[53] Wang RH, Taleb T, Jamalipour A, et al. Protocols for reliable data transport in space Internet. *IEEE Commun Surv Tutor* 2009;**11**(2):21–32.

[54] Hogie K, Criscuolo E, Parise R. Using standard Internet protocols and applications in space. *Comput Netw* 2005;**47**(5):603-50.

[55] Jiao J, Zhang QY, Li H. An optimal ARQ timer design of file delivery time in CFDP NAK model. *2009 5th international conference on wireless communications, networking and mobile computing*. Piscataway: IEEE Press; 2009.

[56] Caini C, Cornice P, Firrincieli R, et al. A DTN approach to satellite communications. *IEEE J Sel Areas Commun* 2008;**26**(5):820–7.

57. CCSDS.CAST flight software as a CCSDS onboard reference architecture. Washington, D.C.: Consultative committee for space data systems; 2021. Report No.:CCSDS 811.1-O-1.

[58] Zhang X, Yang Y, Xu MW, et al. ASER: Scalable distributed routing protocol for LEO satellite networks. *2021 IEEE 46th conference on local computer networks (LCN).* Piscataway: IEEE Press; 2021.

[59] Kopetz H. The rationale for time-triggered Ethernet. *2008 real-time systems symposium*. Piscataway: IEEE Press; 2008.

[60] Li J, Yao JG, Huang DS. Ethernet-based avionic databus and time-space partition switch design. *J Commun Netw* 2015;**17**(3):286–95.

[61] Bello LL, Mariani R, Mubeen S, et al. Recent advances and trends in on-board embedded and networked automotive systems. *IEEE Trans Ind Inform* 2019;**15**(2):1038–51.

[62] Ashjaei M, Lo Bello L, Daneshtalab M, et al. Time-Sensitive Networking in automotive embedded systems: State of the art and research opportunities. *J Syst Archit* 2021;**117**:102137.

63. TSN Time Synchronization NASA's Use Cases and Needs[Internet]. Washington, D.C.: National Aeronautics

Journal Pre-proofs

and Space Administration.c2022[cited 2025 Nov 15]. Available from: https://grouper.ieee.org/groups/802/1/files/public/docs2022/dp-donnelly-NASA-needs-0522-v00.pdf.

64. BAE Systems.RAD750 radiation-hardened PowerPC microprocessor[Internet]. [cited 2025 Nov 15]. Available from: https://www.baesystems.com/en-us/who-we-are/electronic-systems/c4isr/space-electronics#075d8771-15f4-4e0f-bdb8-56d24e2be2fd.

[65] Li Y, Zhu XY, Zhang WG, et al. Design and verification of CPU for teaching based on sparc V8. *2013 fourth international conference on intelligent systems design and engineering applications*. Piscataway: IEEE Press; 2013.

66. ATMEL.Rad-hard 32-bit SPARC embedded processor, TSC695E[Internet]. [cited 2025 Nov 15]. Available from: https://pdf.dzsc.com/88889/26096.pdf.

[67] Guertin SM, Some R, Nsengiyumva P, et al. Radiation specification and testing of heterogenous microprocessor SOCs. *2019 19th European conference on radiation and its effects on components and systems (RADECS).* Piscataway: IEEE Press; 2019.

68. Sjalander.com.Trondheim: LEON4: Fourth generation of the LEON processor[Internet]. [cited 2025 Nov 15]. Available from: https://sjalander.com/research/pdf/sialander-dasia2009.pdf.

[69] Schwaller B, Holtzman S, George AD. Emulation-based performance studies on the HPSC space processor. *2019 IEEE aerospace conference.* Piscataway: IEEE Press; 2019.

70. Dahlia-h2020.eu [Internet].2022[cited 2025 Nov 15]. Available from: https://dahlia-h2020.eu.

[71] Petrick D, Espinosa D, Ripley R, et al. Adapting the reconfigurable spacecube processing system for multiple mission applications. *2014 IEEE aerospace conference*. Piscataway: IEEE Press; 2014.

[72] Schmidt AG, Weisz G, French M, et al. SpaceCubeX: A framework for evaluating hybrid multi-core CPU/FPGA/DSP architectures. *2017 IEEE aerospace conference*. Piscataway: IEEE Press; 2017.

73. Geist A, Brewer C, Davis M,et al. SpaceCube v3. 0 NASA next-generation high-performance processor for science applications. *The 33rd Annual AIAA/USU conference on small satellites*. Reston: AIAA; 2019.

74. Brewer C G. SpaceCube v3. 0 mini: NASA next-generation data-processing system for advanced CubeSat applications. *NASA electronic parts and packaging program (NEPP)2019 electronic technology workshop(ETW).* Washington, D.C.: NASA;2019.

75. Hewlett Packard Enterprise: HPE Spaceborne Computer-2 returns to the international space station[Internet]. [cited 2024 Jan 30]. Available from: https://www.businesswire.com/news/home/20240129331403/en/HPE-Spaceborne-Computer-2-Returns-to-the-International-Space-Station.

[76] Zhang WH, Ma SC, Ji XL, et al. The development of general-purpose brain-inspired computing. *Nat Electron*

Journal Pre-proofs

2024;**7**:954-65.

[77] Chung C, Ward T, Dirgo B. Quantum computing use cases and impacts for the aerospace industry. *2025 IEEE aerospace conference*. Piscataway: IEEE Press; 2025.

[78] he YT, Ji XY, Zhao R, et al. A software reconfiguration method for CPU of satellite-board controller. *Third international conference on testing technology and automation engineering (TTAE 2023).* 2024.

79. An WY, Han XD, Wang C, et al. High-reliability satellite avionics system design using domestic chips. *Spacecraft Engineering* 2021;**30**(5):76-81[Chinese].

80. Beijing institute of microelectronics. Introduction to radiation-resistant eight-core processor BM3883MARH[Internet]. [cited 2025 Nov 15]. Available from: http://www.bime.ac.cn/bm3883marh[Chinese].

81. Aero-Chips: Introduction to high-performance embedded AI processor Yulong810A[Internet]. [cited 2025 Oct 10]. Available from: https://www.myorbita.net/uploadfiles/2024/10/2024102316010919.pdf.

[82] Feather MS, Kennedy B, MacKey R, et al. Demonstrations of system-level autonomy for spacecraft. *2021 IEEE aerospace conference (50100)*. Piscataway: IEEE Press; 2021.

[83] Chen CJ, Yin YB, Yang J, et al. Design and implementation of avionic autonomous management system for deep space exploration. *2023 6th international symposium on autonomous systems (ISAS)*. Piscataway: IEEE Press; 2023.

[84] Bernard DE, Dorais GA, Fry C, et al. Design of the remote agent experiment for spacecraft autonomy. *1998 IEEE aerospace conference proceedings*. Piscataway: IEEE Press; 1998.

[85] Pell B, Bernard DE, Chien SA, et al. An autonomous spacecraft agent prototype. *Auton Rob* 1998;**5**(1):29–52.

[86] Li SJ, Zhang GG, Wang J. Civil aircraft health management research based on big data and deep learning technologies. *2017 IEEE international conference on prognostics and health management (ICPHM)*. Piscataway: IEEE Press; 2017.

[87] Rathsman P, Kugelberg J, Bodin P, et al. SMART-1: Development and lessons learnt. *Acta Astronaut* 2005;**57**(2–8):455–68.

[88] Castano A, Fukunaga A, Biesiadecki J, et al. Automatic detection of dust devils and clouds on Mars. *Mach Vis Appl* 2008;**19**(5):467–82.

[89] Estlin T, Castano R, Bornstein B, et al. Automated targeting for the MER rovers. *2009 third IEEE international conference on space mission challenges for information technology*. Piscataway: IEEE Press; 2009.

[90] Francis R, Estlin T, Gaines D, et al. AEGIS autonomous targeting for the Curiosity rover's ChemCam instrument.

2015 IEEE applied imagery pattern recognition workshop (AIPR). Piscataway: IEEE Press; 2015.

[91] Prokop LE, Dorney DJ, Feather MS, et al. Case studies in verifying spacecraft autonomy. *2021 IEEE aerospace conference (50100).* Piscataway: IEEE Press; 2021.

[92] Bai LH, Yang H, Liang K. The research of autonomous in-orbit health management system for China's manned spacecrafts. *MATEC Web Conf* 2019; **257**:01006.

[93] Suo ML, Tao LF, Zhu BL, et al. Soft decision-making based on decision-theoretic rough set and Takagi-Sugeno fuzzy model with application to the autonomous fault diagnosis of satellite power system. *Aerosp Sci Technol* 2020;**106**:106108.

[94] Chelmins D, Downey J, Johnson SK, et al. Unique challenges testing SDRs for space. *2013 IEEE aerospace conference*. Piscataway: IEEE Press; 2013.

[95] Darabseh A, Freris NM. A software-defined architecture for control of IoT cyberphysical systems. *Clust Comput* 2019;**22**(4):1107–22.

96. Eutelsat.com[Internet]. [cited 2025 Oct 10]. Available from: https://www.eutelsat.com.

[97] Paillassa B, Morlet C. Flexible satellites: software radio in the sky. *10th international conference on telecommunications, 2003.* Piscataway: IEEE Press; 2003.

98. Thales-group.com[Internet]. [cited 2025 Oct 10]. Available from: https://www.thalesgroup.com/en/worldwide/space/press-release/thales-alenia-space-releases-fully-digital-satellite-address-fas.

[99] McKeown N, Anderson T, Balakrishnan H, et al. OpenFlow. *SIGCOMM Comput Commun Rev* 2008;**38**(2):69–74.

100. Bao J, Zhao B, Yu W, et al. Open SAN: A software-defined satellite network architecture. *Aem Sigcomm Computer Communication Review* 2014,347-348.

[101] Hu GX, Li XH, Zhang GH. Research on space mosaic reconfigurable system based on MAS. *2021 IEEE 4th advanced information management, communicates, electronic and automation control conference (IMCEC).* Piscataway: IEEE Press; 2021.

102. Space.skyrocket.de[Internet]. [cited 2025 Oct 10]. Available from: https://space.skyrocket.de/doc_sdat/gsky-1.htm.

103. Li WH, Yang XN, Xu JL, et al. Software-defined satellite application in operationally responsive space. *Spacecraft Engineering* 2009;**18**(5):28-31[Chinese].

[104] Lin YJ, Hu JX, Li L, et al. Design and implementation of on-orbit valuable image extraction for the TianZhi-1 satellite. *2019 IEEE 14th international conference on intelligent systems and knowledge engineering (ISKE)*. Piscataway: IEEE Press; 2019.

105. Krebs, Gunter D. Tianzhi 2D[Internet]. [cited 2025 Oct 10].Available from: https://space.skyrocket.de/doc_sdat/tianzhi-2d.htm.

106. Xing ZY, Zhu SJ, Huang XF, et al. Design on software-defined spacecraft system architecture. *Spacecraft Engineering* 2021;**30**(5):1-8[Chinese].

[107] Fenech H, Amos S, Waterfield T. The role of array antennas in commercial telecommunication satellites. *2016 10th European conference on antennas and propagation (EuCAP)*.Piscataway: IEEE Press; 2016.

[108] Chien WC, Lai CF, Hossain MS, et al. Heterogeneous space and terrestrial integrated networks for IoT: Architecture and challenges. *IEEE Netw* 2019;**33**(1):15-21.

[109] Yan L, Cao SZ, Gong YS, et al. SatEC: A 5G satellite edge computing framework based on microservice architecture. *Sensors* 2019;**19**(4):831.

110. Bao WM, Wang XW. Develop highly reliable and low-cost technology for access to space, embrace the new space economy era. *Aerospace China* 2019; **20**(4):23-30.

111. Bennett T, Cain C, Campbell N, et al. Engineering the cislunar economic system based on ULA's CisLunar-1000 vision. *AIAA SPACE 2016 conference and exposition.* Red Hook: Curran Associates, Inc.; 2016.p.1-21.

[112] Israel DJ, Mauldin KD, Roberts CJ, et al. LunaNet: A flexible and extensible lunar exploration communications and navigation infrastructure. *2020 IEEE aerospace conference*. Piscataway: IEEE Press; 2020.

113. P. Giordano, A. Grenier, P. Zoccarato, et al. Moonlight navigation service-how to land on peaks of eternal light. *Proceedings of the 72nd international astronautical congress(IAC)*. Paris: IAF Press; 2021.p.25-29.

[114] Mangialardo M, Jurado MM, Hagan D, et al. Autonomous navigation for moon missions: A realistic performance assessment, considering earth GNSS signals and LCNS constellation. *2022 10th workshop on satellite navigation technology (NAVITEC)*. Piscataway: IEEE Press; 2022.

115. Qiao L, Li CH, Wang SP, et al. Cislunar cloud network: The cross-domain integrated cislunar-spatial network. *Chinese Space Science and Technology* 2024;**44**(3):43-50[Chinese].

116. Zhou HC, Zheng JJ, Wang HH, et al. Construction and transfer of space-based spatial-temporal reference in earth-moon space. *Chinese Space Science and Technology* 2024;**44**(3):51-59[Chinese].

[117] Littlefield-Lawwill J, Viswanathan R. Advancing open standards in integrated modular avionics: An industry analysis. *2007 IEEE/AIAA 26th digital avionics systems conference*. Piscataway: IEEE Press; 2007.

Journal Pre-proofs

Journal Pre-proofs

[118] Gaska T, Watkin C, Chen Y. Integrated modular avionics-past, present, and future. *IEEE Aerosp Electron Syst Mag* 2015;**30**(9):12-23.

Declaration of Interest Statement

☒ The authors declare that they have no known competing financial interests or personal relationships that could have appeared to influence the work reported in this paper.

☐ The author is an Editorial Board Member/Editor-in-Chief/Associate Editor/Guest Editor for this journal and was not involved in the editorial review or the decision to publish this article.

☐ The authors declare the following financial interests/personal relationships which may be considered as potential competing interests:

Journal Pre-proofs